TBI TBIMOTION

Made in Taiwan

انواع بال اسکرو ساخت تایوان TBI

از سایز 6 mm تا 80 mm

از گام 1 mm تا 64 mm

1. About Ball Screw

1-1 Features of *TBIMOTION* Ball Screw

(1) High Reliability

TBI MOTION has very stringent quality control standards covering every production process. With proper lubrication and use, trouble-free operation for an estented period of time is possible.

(2) Smooth Operation

The high efficiency of ball screw is vastly superior to conventional screws as shown in Fig 1.1.1. The torque required is less than 30%. Linear motion can be easily changed from rotary motion.

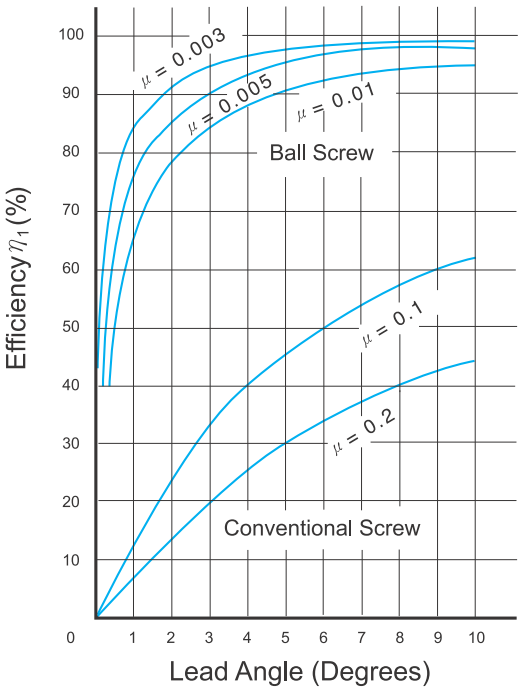

Normal usage (to convert rotary motion to linear motion)

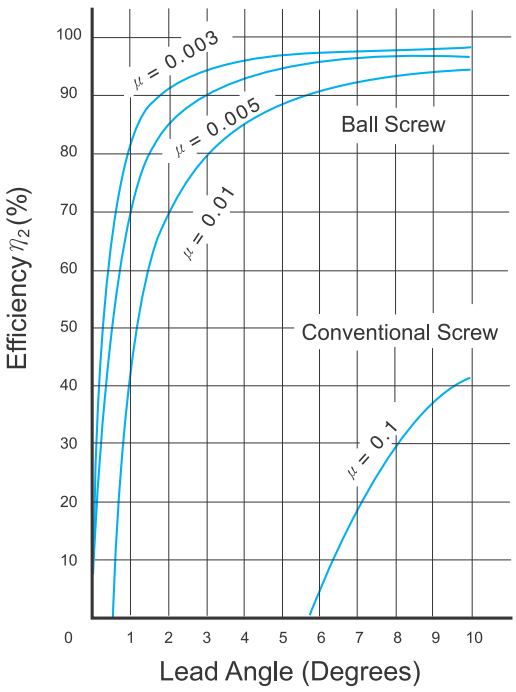

Special usage (to convert linear motion to rotary motion)

μ : friction coefficient

$$P = \frac{2\pi\eta_1 \times T}{\ell}$$

T = Torque kgf · cm
P = Force kgf
ℓ = Lead cm
η_1 = Efficiency

$$T = \frac{\ell \times \eta_2 \times P}{2\pi}$$

T = Torque kgf · cm
P = Force kgf
ℓ = Lead cm
η_2 = Efficiency

Fig 1.1.1 Mechanical Efficiency of Ball Screws

(3) High Rigidity and Preload

When axial play is minimized in conventional screw-nut assemblies, the actuating torque becomes excessive and the operation is not smooth. The axial play in ***TBI MOTION*** precision ball screws may be reduced to zero by preloading and a light smooth operation is still possible. Therefore, both low torque and high rigidity can be obtained simultaneously. ***TBI MOTION*** ball screws have gothic arch groove profiles (Fig1.1.2) which allow these conditions to be achieved.

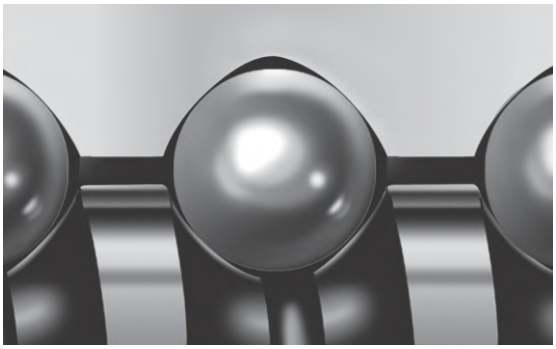

Fig 1.1.2 Groove Shape of ***TBIMOTION*** Precision Ball Screw

(4) Circulation Method

Fig1.1.3 is ball return tube method.

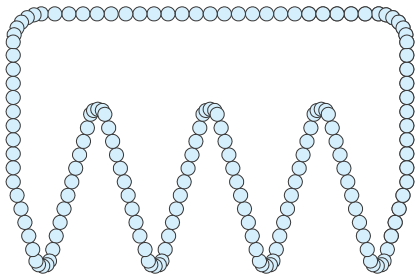

Fig 1.1.3 External Ball Circulation Nuts

Fig1.1.4 is ball defelector method.

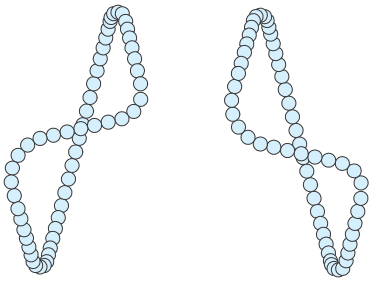

Fig 1.1.4 Internal Ball Circulation Nuts

(5) High Durability

TBI MOTION Rigidly selected materials, intensive heat treating and processing techniques, backed by years of experience, have resulted in the most durable ball screws manufactured. (See Table1.1.1 & Fig1.1.5)

Table 1.1.1 Material and Heat Treatment

Item	Material	Hardness
Screw	SCM450 S55C	HRC 58°~64°
Nut	SCM415H SCM420H	HRC 58°~64°
Stell Ball	SUJ2	HRC 60° UP

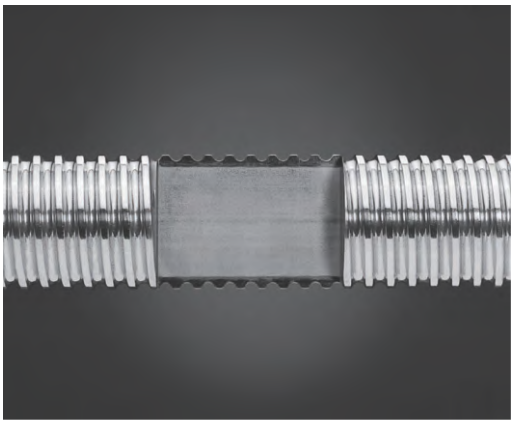

Fig 1.1.5 Heat Treatment

1-2 Ball Screw Selection Precedure

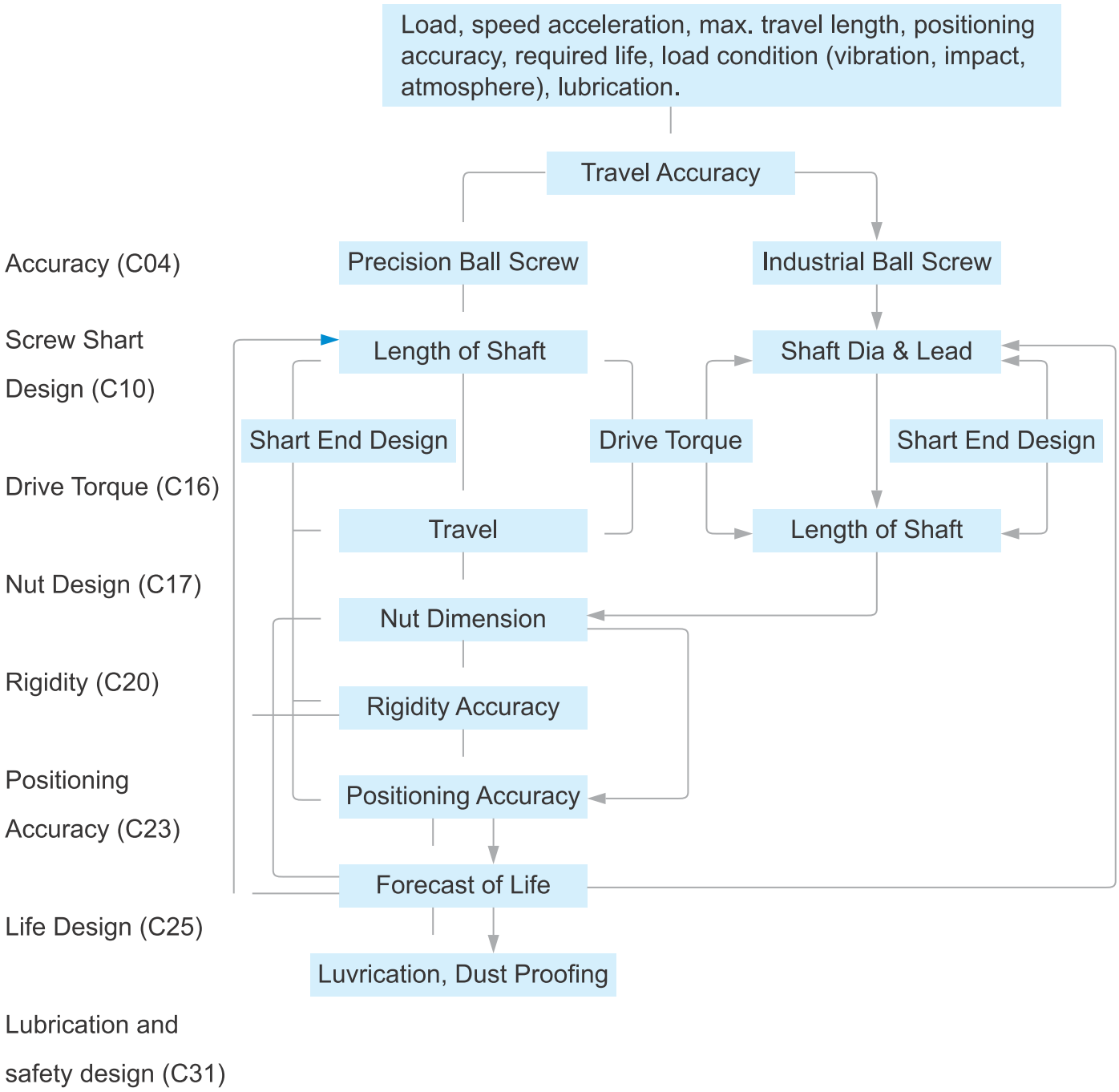

1-3 Accuracy

1-3-1 Lead／Travel Accuracy

Lead accuracy of *TBI MOTION* ball screws (grade C0~C5) is specified in 4 basic terms (E, e, e_{300}, $e_{2\pi}$). There are defined in Fig 1.3.1 Tolerance of deviation (± E) and variation (e) of accumulated reference travel are shown in Table 1.3.1~1.3.3.

Accumulated travel deviations for grade C7 and C10 are specified only by the allowable value per 300mm measured within any portion of the thread length. They are 0.05mm for C7 and 0.21mm for C10.

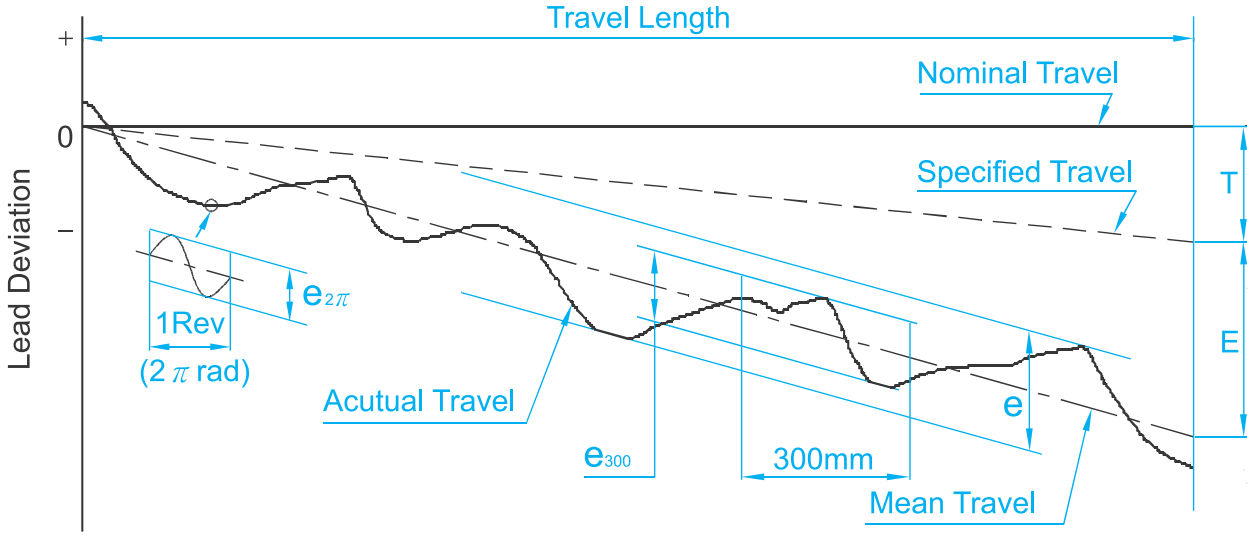

Fig 1.3.1 Diagram of Lead Accuracy

Table 1.3.1 Definition of terms for Lead Accuracy

Terms	Reference	Definition	Allowable
Travel Compensation	T	Travel compensation is the difference between specified and nominal travel with in the useful travel. A slightly smaller value compared to the nominal travel is often selected by the customer to compensate for an expected elongation caused by temperature rise or external load. Therefore " T " is usually a negative value. Note : if no compensation is needed, specified travel is the same as nominal travel.	
Actual Travel		Actual travel is the axial displacement of the nut relative to the screw shaft.	
Mean Travel		Mean travel is the linear best fit line of actual. This could be obtained by the least squares method. This line represents the tendency of actual travel.	
Mean Travel Deviation	E	Mean travel deviation is the difference beteen mean travel and specified travel within travel length.	Table 1.3.2
Travel Variations	e e_{300} $e_{2\pi}$	Travel variations is the band of 2 lines drawn parallel to the mean travel, on the plus and minus side. Maximum width of varation over the travel length. Actual width of variation for the length of 300mm taken anywhere within the travel length.Wobble error, actual width of variation for one revolution (2 π radian)	Table 1.3.2 Table 1.3.3 Table 1.3.3

Table 1.3.2 Mean Travel Deviation (± E) and Travel Variation (e) (JIS B 1192)

Unit : μ m

Grade			C0		C1		C2		C3		C5		C7	C10
Travel Length (mm)	Over	Incl.	±E	e	±E	e	±E	e	±E	e	±E	e	e	e
		100	3	3	3.5	5	5	7	8	8	18	18	±50/300mm	±210/300mm
	100	200	3.5	3	4.5	5	7	7	10	8	20	18		
	200	315	4	3.5	6	5	8	7	12	8	23	18		
	315	400	5	3.5	7	5	9	7	13	10	25	20		
	400	500	6	4	8	5	10	7	15	10	27	20		
	500	630	6	4	9	6	11	8	16	12	30	23		
	630	800	7	5	10	7	13	9	18	13	35	25		
	800	1000	8	6	11	8	15	10	21	15	40	27		
	1000	1250	9	6	13	9	18	11	24	16	46	30		
	1250	1600	11	7	15	10	21	13	29	18	54	35		
	1600	2000			18	11	25	15	35	21	65	40		
	2000	2500			22	13	30	18	41	24	77	46		
	2500	3150			26	15	36	21	50	29	93	54		
	3150	4000			30	18	44	25	60	35	115	65		
	4000	5000					52	30	72	41	140	77		
	5000	6300					65	36	90	50	170	93		
	6300	8000							110	60	210	115		
	8000	10000									260	140		
	10000	12500									320	170		

Table 1.3.3 Varation per 300mm (e_{300}) and Wobble Error ($e_{2\pi}$) (JIS B 1192)

Unit : μ m

Grade	C0	C1	C2	C3	C5	C7	C10
e_{300}	3.5	5	7	8	18	50	210
$e_{2\pi}$	2.5	4	5	6	8		

1-3-2 Axial Play

Accuracy grade and axial play of *TBI MOTION*'s precision ball screw is shown in Table 1.3.4

Table 1.3.4 Combination of Accuracy Grade and Axial Play

Grade	P0	P1	P2	P3	P4
Axial Play	Yes	No	No	No	No
Preload	No	No	Light	Medium	Heavy

Excessive preload increase the friction torque and generates heat which reduce the life expectancy. However, insufficient preload reduces stiffness and increase the possibility of lost motion. ***TBIMOTION*** recommends that the preload force applied on CNC machine tolls should not bigger than 8% of the dynamic load; 5% for industrial automation X-Y table.

Table 1.3.5 The reference spring force of (P2)

Model No.	Spring Force (Kg) Single Nut	Spring Force(Kg) Double Nut
1605	0.1~0.3	0.3~0.6
2005	0.1~0.3	0.3~0.6
2505	0.2~0.5	0.3~0.6
3205	0.2~0.5	0.5~0.8
4005	0.2~0.5	0.5~0.8
2510	0.2~0.5	0.5~0.8
3210	0.3~0.6	0.5~0.8
4010	0.3~0.6	0.5~0.8
5010	0.3~0.6	0.8~1.2
6310	0.6~1.0	0.8~1.2
8010	0.6~1.0	0.8~1.2

Table 1.3.6 Axial Play (P0) Clearance in the Axial Direction of Rolled and Ground Ball Screw

Unit : mm

Nominal Diameter	Rolled Ball Screw Clearance in the Axial Direction (max.)	Ground Ball Screw Clearance in the Axial Direction (max.)
Ø04~Ø14 miniature ball screw	0.05	0.015
Ø15~Ø40 middle size of ball screw	0.08	0.025
Ø50~Ø100 big size of ball screw	0.12	0.05

1-3-3 Definition of Mounting Accuracy and Tolerance on Ball Screw

To use a ball screw properly dimensional accuracy and tolerances are most important. ***TBI MOTION*** will help you determine the tolerance factors as they are subject to change according to accuracy grade.

(1) Periphery run-out of the supporting part of the screw shaft to tha screw groove.

(2) Concentricity of a mounting portion of the shaft to the adjacent ground portion of the screw shaft.

(3) Perpendicularity of the shoulders to the adjacent ground portion of tha screw shaft.

(4) Perpendicularity of the nut flange to the axis of the screw shaft.

(5) Concentricity of the ball nut diameter to the screw groove.

(6) Parallelism of the mounting surface of a ball nut to the screw groove.

(7) Total run-out of the screw shaft to the axis of the screw shaft.

All ***TBI MOTION*** ball screws are manufactured, inspected and guaranteed to be within specifications.

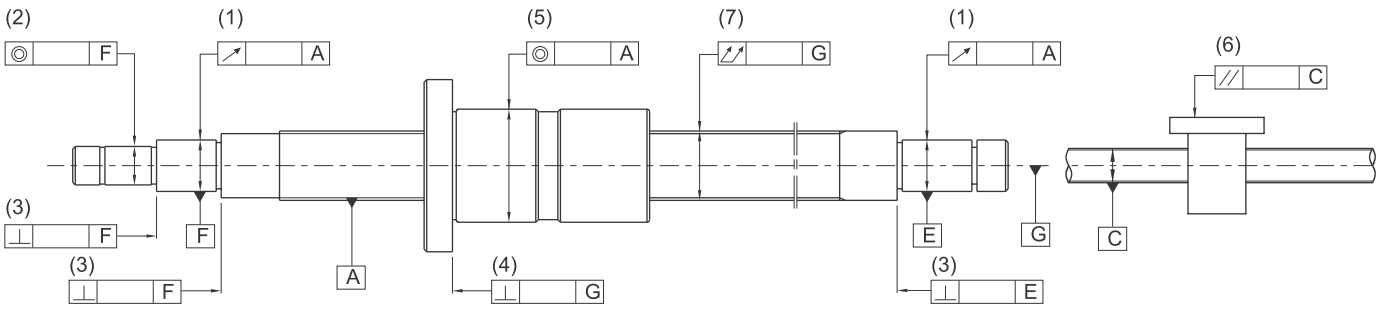

Fig 1.3.2 Mounting Accuracy and Tolerance

1-3-4 Preload Torque

Terms in relation to the preload torque generated during the rotation of the preload ball screws are shown in Fig 1.3.8.

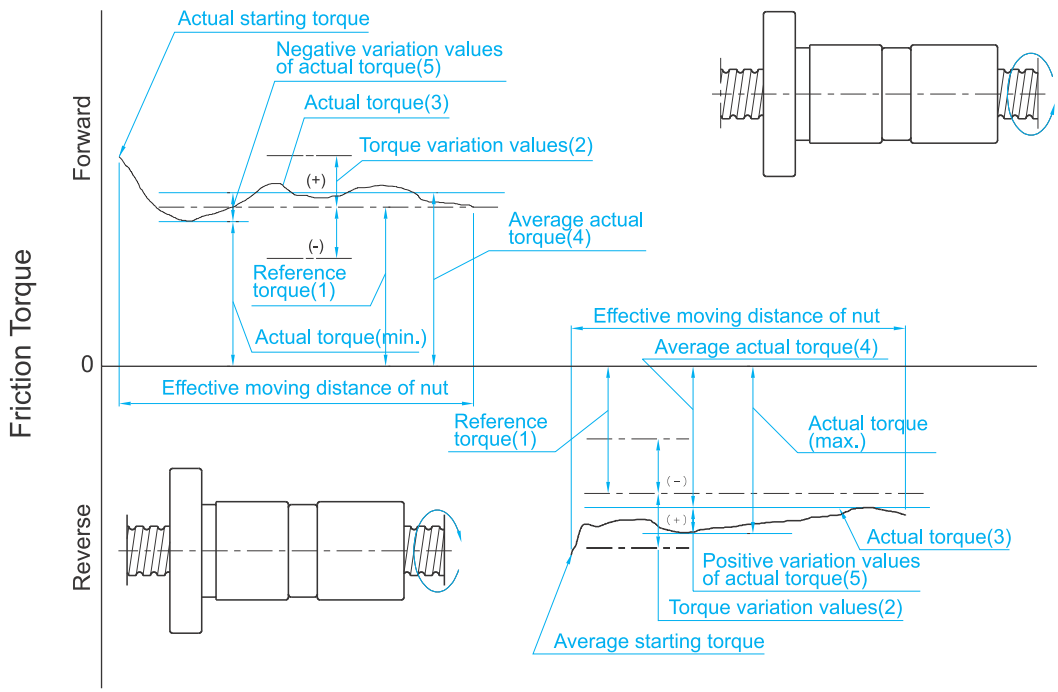

Fig 1.3.3 Descriptions of preload torque

Glossary

(1) Preload

The stress generated inside the screws when inserting a set of steel balls of one gage (approximately 2μ)larger into the nut or using them on the 2 nuts which exercise mutual displacements along the screws axis in order to eliminate the gaps of the screw or upgrade the rigidity of the screw.

(2) Preload dynamic torque

The dynamic torque required for continuously rotating the screws shaft or the nuts under unload condition after the special preload has been applied upon the ball screws.

(3) Reference

The targeted preload dynamic torque Fig 1.3.3-(1)

(4) Toque variation values

The variation values of the targeted preload torque variation rates are specified generally based on JIS standards as indicated in Table.

(5) Torque variation rate

The rate of variation values in relation to the referance torque.

(6) Actual torque

The actually measured preload dynamic torque of the ball screws.

(7) Average actual torque

The arithmetic average of the maximal and minimal actual torque values measured when the nuts are exercieing reciprocating movements.

(8) Actual torque variation values

The maximal variation values measured within the effective length of the threads when the nuts are exercising reciprocating movements, the positive or negative values relative to the actual torque are adopted.

(9) Actual torque variation rate

The rate of actual torque variation values in relation of the average actual torque.

Table 1.3.7 Permissible ranges of toque variation rates

Reference torque kgf・cm		Effective threading length mm										
		Below 4000								4000~10000		
		Slenderness 1: below 40				Slenderness1:40~1:60				-		
		Grade				Grade				Grade		
Over	Incl	C0	C1	C2, C3	C5	C0	C1	C2, C3	C5	C1	C2, C3	C5
2	4	±35%	±40%	±45%	±55%	±45%	±45%	±55%	±65%	-	-	-
4	6	±25%	±30%	±35%	±45%	±38%	±38%	±45%	±50%	-	-	-
6	10	±20%	±25%	±30%	±35%	±30%	±30%	±35%	±40%	-	±40%	±45%
10	25	±15%	±20%	±25%	±30%	±25%	±25%	±30%	±35%	-	±35%	±40%
25	63	±10%	±15%	±20%	±25%	±20%	±20%	±25%	±30%	-	±30%	±35%
63	100	-	-	±15%	±20%	-	-	±20%	±25%	-	±25%	±30%

Remarks : 1. Slenderness is the value of dividing the screws shaft outside diameter with the screws shaft threading length.
2. For reference torque less than 2 kgf・cm, ***TBIMOTION*** specifications will apply.

Calculation of Reference Torque Tp

The formula for computing reference torque of the ball screws is given in following :

$$T_P = 0.05\,(\tan\beta)^{-0.5} \cdot \frac{Fao \cdot \ell}{2\pi}$$

Where, Fao = Preload (kgf)

β = Lead angle

ℓ = Lead (cm)

Measurement Conditions

The preload dynamic torque Tp is determined first by adopting the following measurement conditions together with the method illustrated in Fig 1.3.4 for measuring the force (F) needed to rotate the screws shaft without bringing the nuts to rotate along with the shaft after the screws shaft has started rotating, then multiplying the measured value of (F) with the arm of force L, the product is Tp.

$T_p = F \cdot L$

Measure conditions

(1) Measurment is executed under the condition of not attaching with scraper.

(2) The rotating speed during measurement maintains at 100 rpm.

(3) According to JSK2001(industrial lubrication oil viscosity) be in compliance standard), the lubrication oil used should be in complience with IS0 VG68.

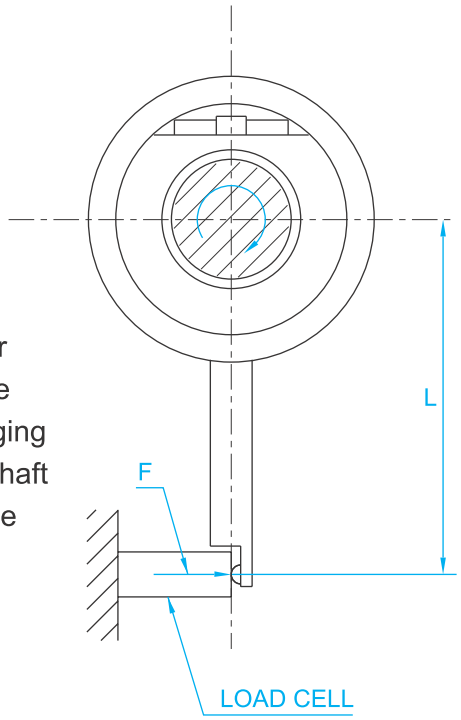

Fig 1.3.4 Preload dynamic torque measuring method

1-4 Screw Shaft Design

1-4-1 Mounting Methods

Both the critical speed and column bucking load depend upon the method of mounting and the unsupported length of the shaft, the most common mounting methods for ball screws are shown in Fig 1.4.1~1.4.8.

(Mounting Screw and Nut)

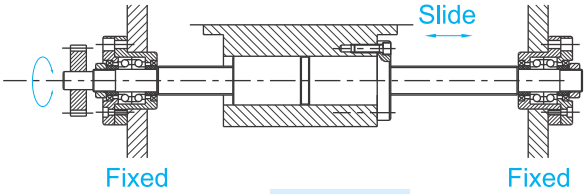

Fig 1.4.1

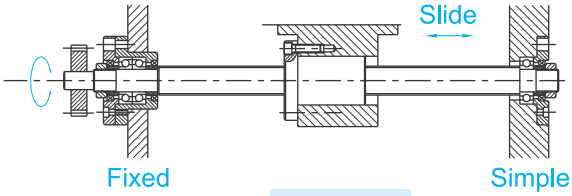

Fig 1.4.5

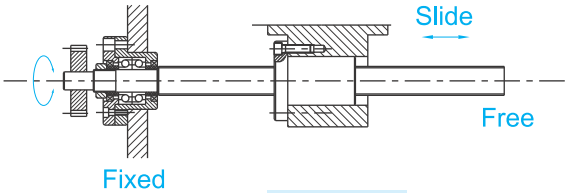

Fig 1.4.2

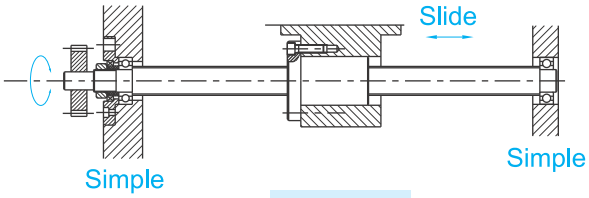

Fig 1.4.6

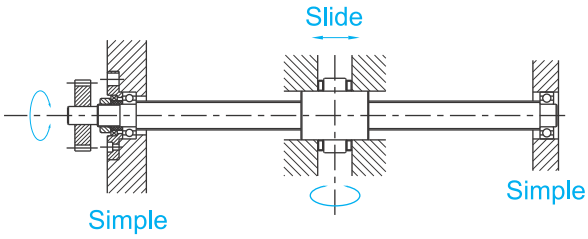

Fig 1.4.3

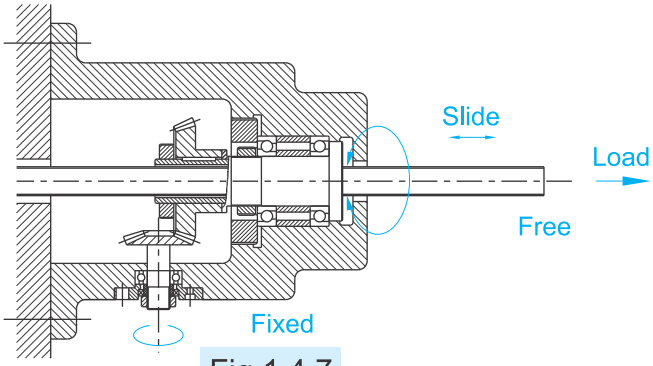

Fig 1.4.7

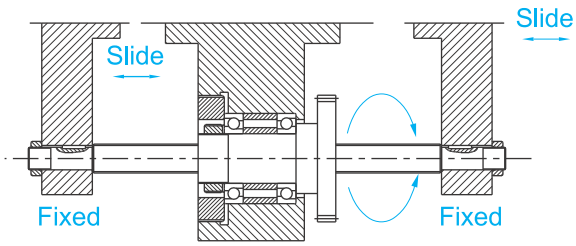

Fig 1.4.4

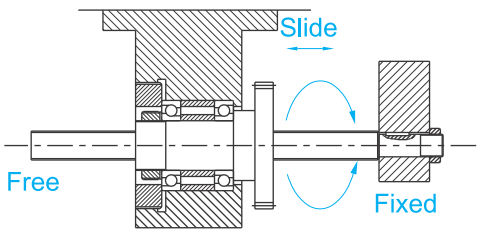

Fig 1.4.8

(Mounting Methods)

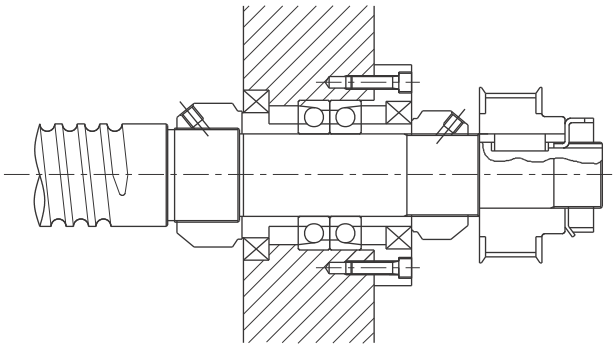

Fig 1.4.9

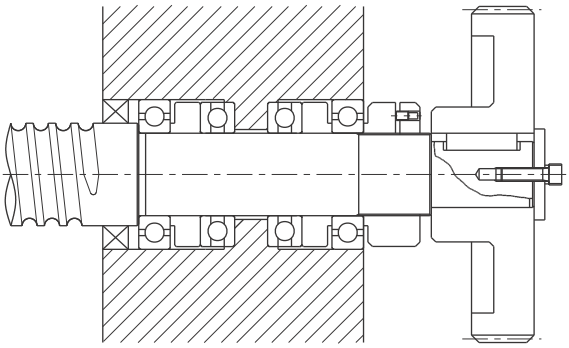

Fig 1.4.11

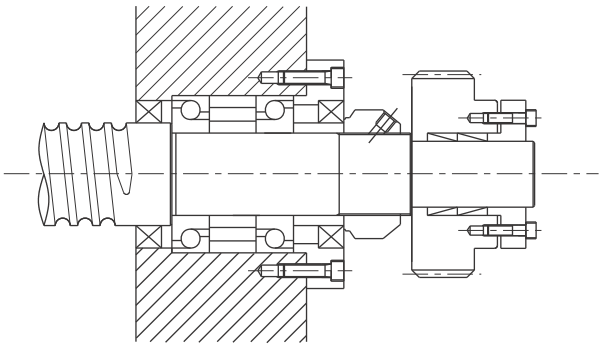

Fig 1.4.10

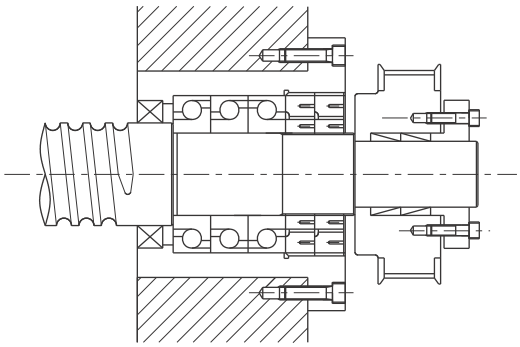

Fig 1.4.12

(Most Common Mounting Methods for Ball Screws)

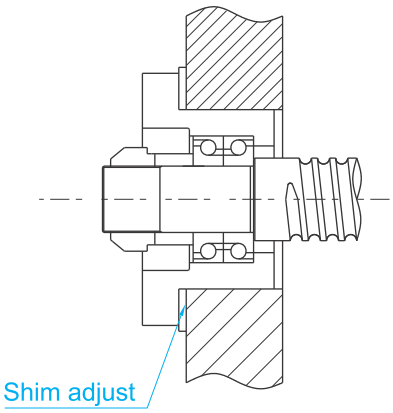

Fig 1.4.13

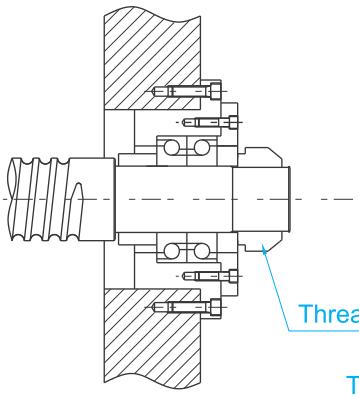

Fig 1.4.14

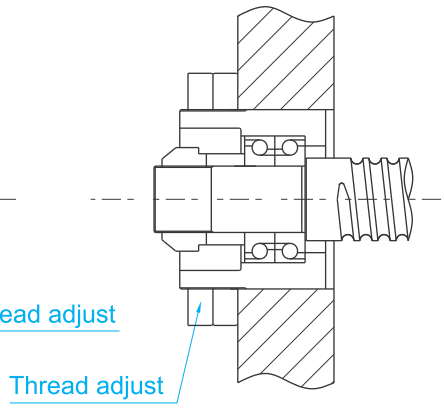

Fig 1.4.15

1-4-2 Allowable Axial Load

(1) Buckling Load

The safety of the screw shaft against buckling needs to be checked when the shaft is expected to receive buckling loads.

Fig 1.4.16 shows a diagram which summarizes the allowable compressive load for buckling for each nominal outside diameter of screw shaft. (Calculate with the equation shown right when the nominal outside diameter of the screw shaft exceeds 125mm.)

Select the graduation of allowable axial load according to the method of ball screw support.

$$P = \alpha \cdot \frac{I \cdot N \cdot \pi^2 \cdot E}{L^2} = m \frac{dr^4}{L^2} \cdot 10^3$$

Where

α = Safty Factor (α = 0.5)

E : Vertical elastic modules ($E = 2.1 \cdot 10^4 kgf/mm^2$)

I : Min. secondary moment of screw shaft sectional area

$$I = \frac{\pi}{64} dr^4 (mm^4)$$

dr : Screw shaft root diameter (mm)

L : Mounting distance (mm)

m · N : Coefficient determined from mounting method of ball screw

Simple-Simple	m = 5.1	(N = 1)
Fixed-Simple	m = 10.2	(N = 2)
Fixed-Fixed	m = 20.3	(N = 4)
Fixed-Free	m = 1.3	(N = 1／4)

(2) Allowable Tensile／Buckling Load

Check the allowable tensile／buckling load (the formula shown below) and allowable load of the ball groove regardless of the mounting method when the mounting distance is short.

$$P = \sigma A = 11.8\, dr^2 (kgf)$$

Where,

P : Buckling load (kgf)

σ : Allowable tensile compressive stress (kgf/mm^2)

A : Sectional area of screw shaft root bottom diameter (mm^2)

dr : Screw shaft root diameter (mm)

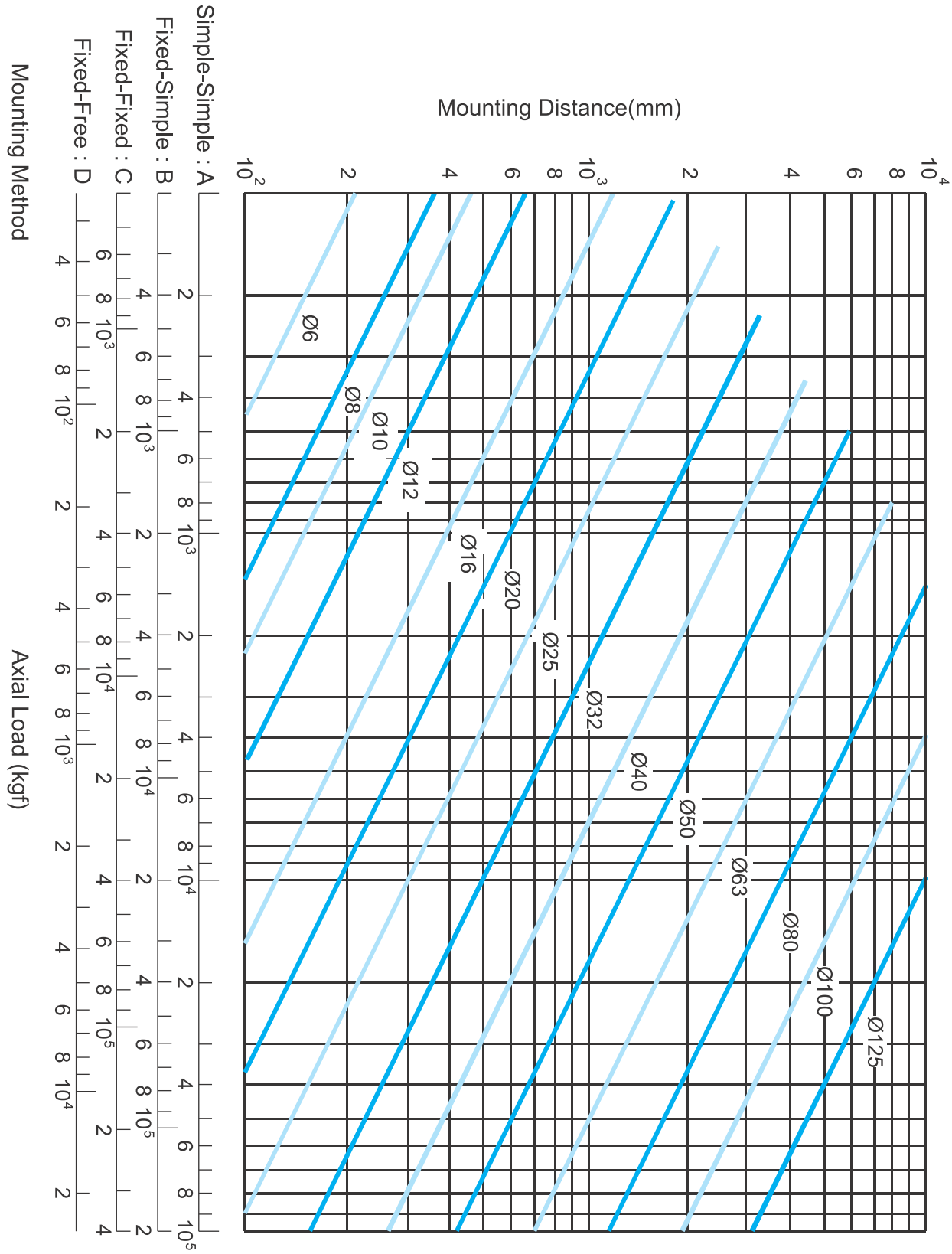

Fig 1.4.16 Buckling Load vs. Nominal Diameter and Length

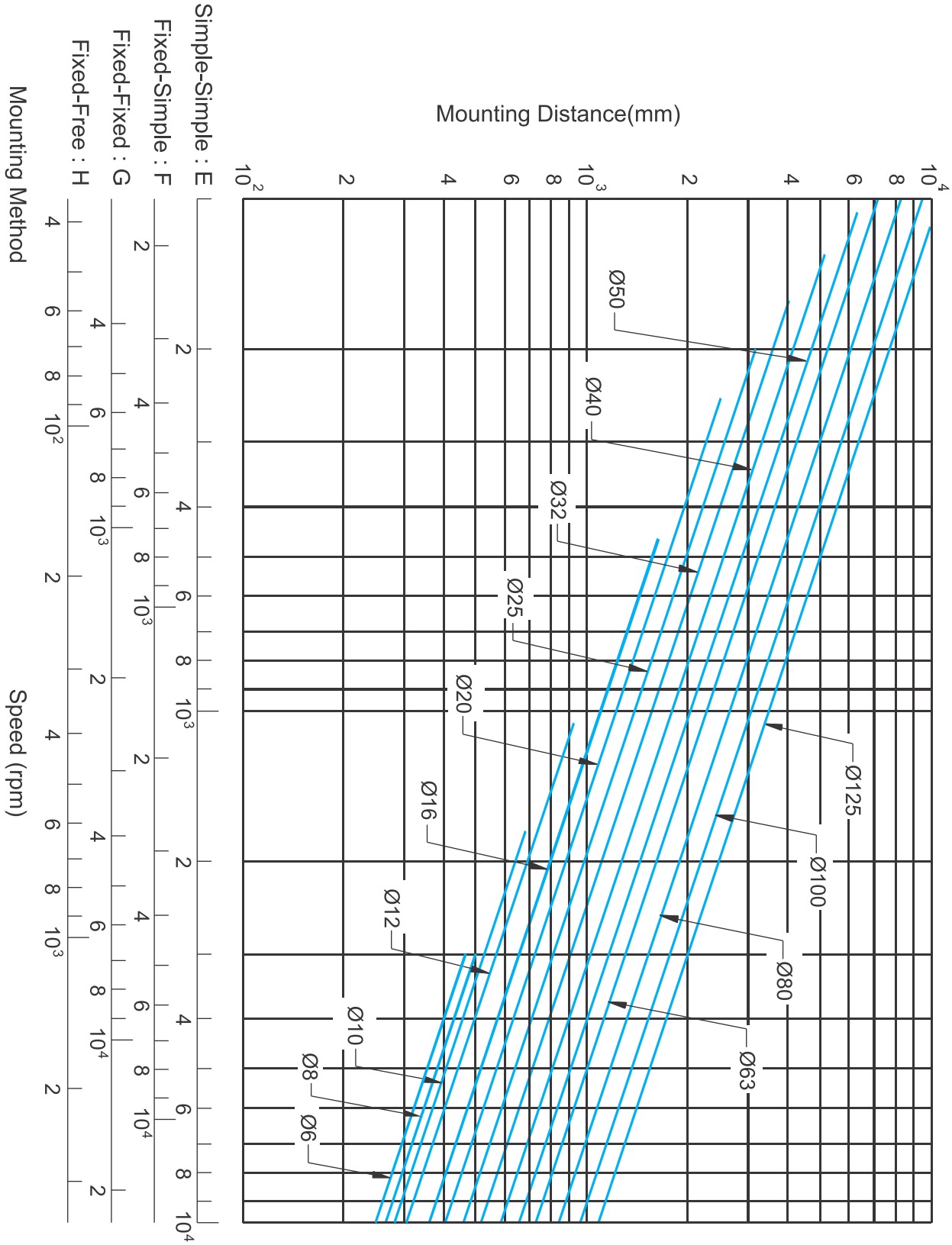

Fig 1.4.17 Critical Speed vs. Nominal Diameter

1-4-3 Critical Speed

(1) Dangerous speed

It is necessary to check if the ball screw rotation speed is resonant with the natural frequency of the screw shaft. *TBI MOTION* has determined 80% or less of this critical speed as an allowable rotation speed. Fig 1.4.17 shows a diagram which summarizes the allowable rotation speed for shaft nominal diameters up to outside diameter of the screw shaft exceeds 125mm.) Select the graduation of allowable rotation speed according to the method of supporting the ball screw. Where the working rotation speed presents a problem in terms of critical speed, it would be best to provide an intermediate support to increase the natural frequency of the screw shaft.

(2) dm · n value

The allowable rotation speed is regulated also by the dm · n value (dm : diameter of central circle of steel ball, n : Revolution speed, rpm) which expresses the peripheral speed.

Generally,

For precision (accuracy grade C7 to C0)

$dm \cdot n \leqq 70{,}000$

For general industry (C10)

$dm \cdot n \leqq 50{,}000$

Product exceeding the above limits can be produced, contact *TBI MOTION*.

※Particular consideration is necessary for manufacturing with the screw length／shaft dia. Ratio is $\varepsilon > 70$, In such an event, contact *TBI MOTION*.

$$n = \alpha \cdot \frac{60\lambda^2}{2\pi L^2}\sqrt{\frac{EIg}{\gamma A}} = f\frac{dr}{L^2}\cdot 10^7 \text{ (rpm)}$$

Where

α : Safty factor (α = 0.8)

E : Verticle elastic modules ($E = 2.1 \cdot 10^4$ kgf／mm^2)

I : Min. secondary moment of screw shaft sectional area

$I = \frac{\pi}{64} dr^4 (mm^4)$

dr : Screw shaft root diameter (mm)

g : Acceleration of gravity ($g = 9.8 \cdot 10^3$ mm／s^2)

γ : Density ($\gamma = 7.8 \cdot 10^{-6}$ kgf／mm^3)

A : Screw shaft sectional area ($A = \pi dr^2/4$ mm^2)

L : Mounting distance (mm)

f, λ : Coefficient determined from the ball screw mountung metnod

Simple-Simple $f = 9.7$ ($\lambda = \pi$)

Fixed-Simple $f = 15.1$ ($\lambda = 3.927$)

Fixed-Fixed $f = 21.9$ ($\lambda = 4.730$)

Fixed-Free $f = 3.4$ ($\lambda = 1.875$)

1-5 Driving Torque

1-5-1 Driving torque Ts of the transmission shaft

$T_S = T_P + T_D + T_F$ (in fixed speed)

$T_S = T_G + T_P + T_D + T_F$ (when accelerating)

T_G : Acceleration torque (1)

T_P : Load torque (2)

T_D : Preload torque (3)

T_F : Friction torque (4)

(1) Acceleration T_G

$T_G = J\alpha$ (kgf · cm)

$\alpha = \dfrac{2\pi n}{60\triangle t}$ (rad／s^2)

J : Moment of inertia (kgf · cm · s^2)

α : Angular acceleration (rad／s^2)

n : Revolutions (min^{-1})

$\triangle t$: Starting time (sec)

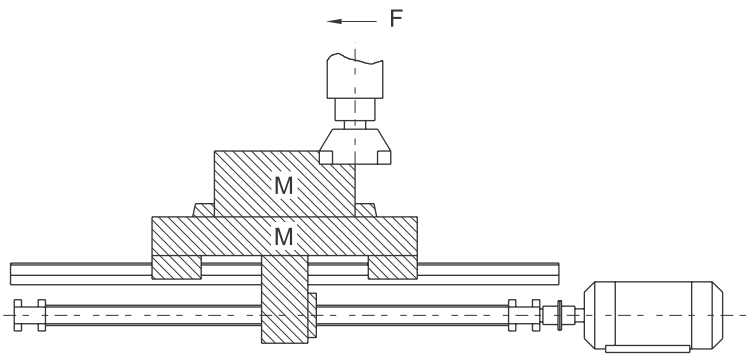

Fig 1.5.1 Moment of inertia of load

【For reference】Moment ot inertia of load (see Table 1.5.1)

$J = J_{BS} + J_{CU} + J_W + J_M$

J_{BS} : Moment of inertia Ball screws shaft

J_{CU} : Moment of inertia Coupler

J_W : Moment of inertia Linear motion part

J_M : Moment of inertia Roller shaft part of motor shaft

(2) Load torque T_P

$T_P = \dfrac{P \cdot \ell}{2\pi\eta_1}$ (kgf · cm)

$P = F + \mu Mg$

P : Axial load (kgf)

ℓ : Load (cm)

η_1 : Positive efficient

→ The efficient when rotating motion is altered to linear motion

F : Cutting force (kgf)

μ : Friction

M : Mass of moving object (kg)

g : Acceleration of gravity (9.8 m／s^2)

$T_P = \dfrac{P \cdot \ell \cdot \eta_2}{2\pi}$ (kgf · cm)

η_2 : Reverse efficiency

→ The efficiency when linear motion returns to rotating motion

(3) Preload torque T_D

$T_D = \dfrac{K \cdot P_{PL} \cdot \ell}{\sqrt{\tan\alpha} \cdot 2\pi}$ (kgf · cm)

K : Internal coefficient

(0.05 is usually adopted)

P_{PL} : Preload (kgf)

ℓ : Lead (cm)

α : Lead angle

(4) Fricition torque T_F

$T_F = T_B + T_O + T_J$ (kgf · cm)

T_B : Friction torque of bracing shaft

T_O : Friction torque of free shart

T_J : Friction torque motor shaft

The friction torque of the bracing shaft would be affected by the lubrication oil. Or special attention has to be paid to unexpected excessive friction torque which may be generated when oil seal is overly tight, or may result in temperrature rise.

Table1.5.1 Conversion formula for moment of inertia of load

Formula / Moment of inertia converted from motor shaft	J
Cylinder load	$\frac{\pi \rho L D^4}{32}$
Linearly moving object	$\frac{M}{4}\left(\frac{V\ell}{\pi \cdot N_M}\right)^2 = \frac{M}{4}\left(\frac{P}{\pi}\right)^2$
Unit	$kg \cdot m^2$
Moment of inertia during deceleration	$J_M = \left(\frac{J\ell}{N_M}\right)^2 \cdot J\ell$

ρ : Density (kg/m^3) $\rho = 7.8 \cdot 10^3$

L : Cylinder length (m)

D : Cylinder (m)

M : Mass of the linear motion part (kg)

$V\ell$: Velocity of the linear moving object (m／min)

N_M : Motor shaft revolutions (min^{-1})

P : The moving magnitude of the linearly moving object per every rotation of the motor (m)

$N\ell$: Rotations in longitudinal moving direction (min^{-1})

$J\ell$: Moment of inertia in load direction

J_M : Moment of inertia in motor direction

1-6 Nut Design

1-6-1 Selection of Nut

(1) Series

When making selection of series, please take into consideration of demanded accuracy, intended delivery time, dimensions (the outside diameter of the screw, ratio of lead／the outside diameter of the screw,) preload load, etc.

(2) Circulation type

Selection of circulation type : Please focus on the economy of space for the nut installation portion.

(3) Number of loop circuits

Performance and life of service should be considered when selecting number of loop circuits.

(4) Shape of flanges (FLANGE)

Please make selection based on the available space for the installation of nuts.

(5) Oil hole

Oil holes are provided for the precision ball screws, please use them during machine assembling and regular furnishing.

Table1.6.1 Circulation type

Circulation type	Model		Characteristic
	Single Nut	Double Nuts	
Internal circulation type	SFM SFK BSH SFNI SFNU	DFM	●With nuts of finely crafted outside diameter (occupying small space) ●Applicable to those with smaller lead / the outside diameter of the screw
External circulation type	SFV XSV BSH	DFV	●Economy ●Suitable for mass production ●Applicable to those with larger lead / the outside
End-caps circulation type	SFY SFH	DFS	●Suitable for high speed positioning

1-6-2 Nut Types

U, I, M - Type Nut

In this type, the steel balls move along the grooves of the internal circulator, diagonally pass over the tooth tops of the scraws,than return to the origin point. It generally possesses one roll of steel balls and one single pass circulation. (see Fig 1.6.1) It is generally provided with several rolls of steel balls and a single pass circulation tube, both round type and projecting tube type of profile may be adopted.

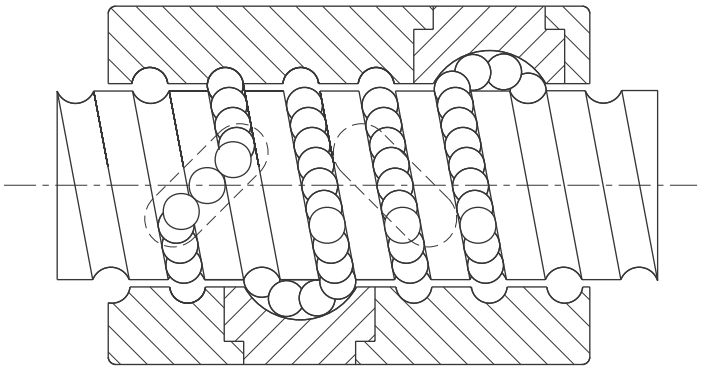

Fig 1.6.1 U, I, M - Type Nut

K - Type Nut

It applies the similar circulation as that of I-type, but circulation takes place in key slots of identical angle for different circulation. (see Fig 1.6.2)

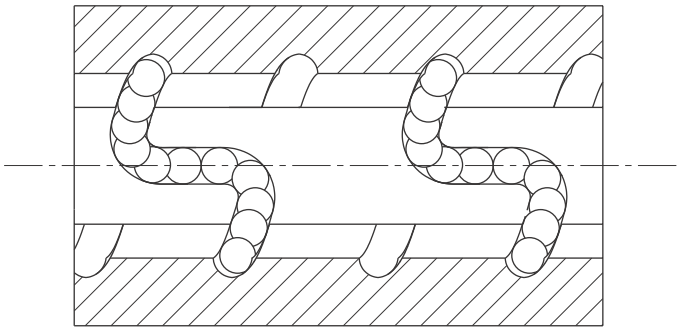

Fig 1.6.2 K - Type Nut

V - Type Nut

The recycle way of V - type is similar with T - type. Besides maintaining the advantages of T - type, the design of circulation of the steel ball is also along the direction of tangent of helix and can decrease the sound from the hitting between steel ball and the direction of tangent of helix and increase the smooth of recyle. V - type nut is suitable for the high-speed and heavy-load situations specially. (see Fig 1.6.3)

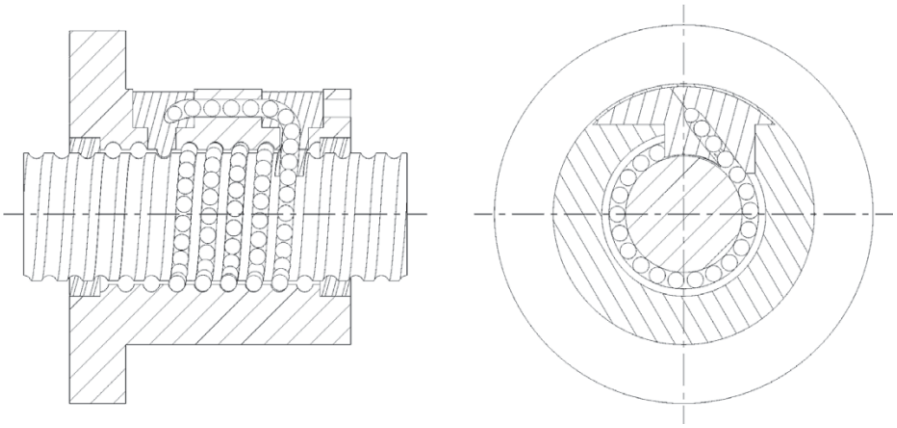

Fig 1.6.3 V - Type Nut

Y, H - Type Nut

Type Y ball nut is dimensionally interchangeable with type E ball nut and type H ball nut shares the dimension with Type S ball nut. Both of the above ball nuts adopt the same design in circulation system. Moreover, type Y and H ball nut is designed to strengthen the performance by introducing the thin-flex material for better performance in wiping ability and higher rigidity in circulation with reinforced circulation parts. (see Fig 1.6.4)

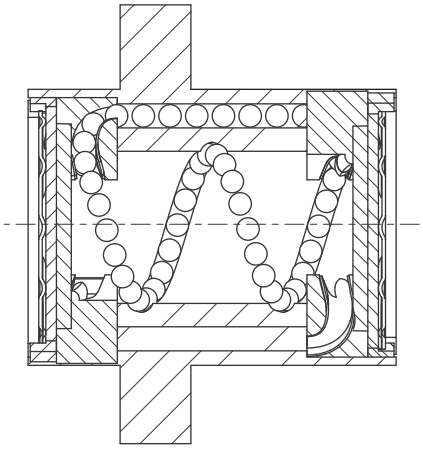

Fig 1.6.4 Y, H - type nut

1-7 Rigidity

Excessively weak rigidity of the screw'speripheral structure is one of the primary causes that result in lost motion. Therefore, in order to achieve excellent positioning accuracy for the precison machines such as NC working machines, etc., axial rigidity balance as well as torsional rigidity for the parts at various portions of the transmission screw have to be taken into consideration at time of designing.

Static Rigidity K

The axial elastic deformation and rigidity of the transmission screw system can be determined form the formula below.

$$K = \frac{P}{e} \text{ (kgf／mm)}$$

P：Axial load (kgf) borne by the transmission screw system

e：Axial flexural displacement (mm)

$$\frac{1}{K} = \frac{1}{K_S} + \frac{1}{K_N} + \frac{1}{K_B} + \frac{1}{K_H} \text{ (mm／kgf)}$$

K_S：Axial rigidity of screw shaft (1)

K_N：Axial rigidity of nut (2)

K_B： Axial rigidity of support shaft (3)

K_H：Axial rigidity of installation (4)

(1) Axial rigidity Ks and displacement δ s

$$K_s = \frac{P}{\delta s} \text{ (kgf／mm)}$$

P：Axial load (kgf)

For places of Fixed - Fixed installation

$$\delta_{SF} = \frac{PL}{4AE} \text{ (mm)}$$

For places other than Fixed - Fixed installation

$$\delta_{SS} = \frac{PL_0}{AE} \text{ (mm)}$$

$\delta_{SS} = 4\,\delta_{SF}$

δ_{SF}：Directional displacement at places of fixed-fixed

δ_{SS}：Directional displacement at places other than fixed-fixed installation

A：Cross-sectional area of the screw shaft tooth root diameter (mm^2)

E：Longitudinal elastic modulus ($2.1 \cdot 10^4$ kgf／mm^2)

L：Distance between installations (mm)

L_0：Distance between load applying points (mm)

(2) Axial rigidity K_N and displacement δ_N

$$K_N = \frac{P}{\delta_S} \text{ (kgf/mm)}$$

(a) In case of single nut

$$\delta_{NS} = \frac{K}{\sin\beta}\left(\frac{Q^2}{d}\right)^{\frac{1}{3}} \cdot \frac{1}{\zeta} \text{ (mm)}$$

$$Q = \frac{P}{n \cdot \sin\beta} \text{ (kgf)}$$

$$n = \frac{D_0 \pi m}{d} \text{ (each)}$$

Q : Load of one steel ball (kgf)

n : Number of steel ball

k : Constant determined based on material, shape, dimensions

$k \fallingdotseq 5.7 \cdot 10^{-4}$

β : Angle of contact (45°)

P : Axial load (kgf)

d : Steel ball diameter (mm)

ζ : Accuracy, internal structure coefficient

m : Effective number of balls

D_0 : Steel ball center diameter (mm)

$$D_0 = \frac{\ell}{\tan\alpha \cdot \pi}$$

ℓ : Lead (mm)

α : Lead angle

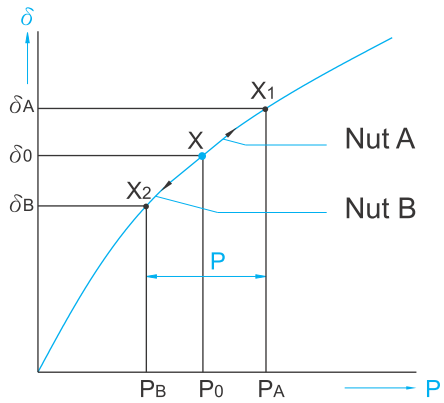

Fig 1.7.2

(b) In case of double nuts

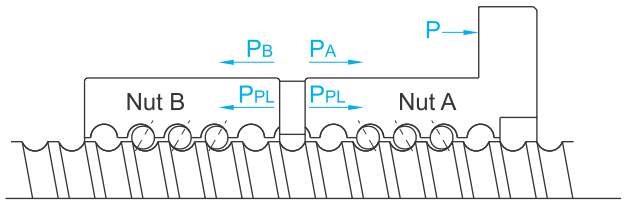

Fig 1.7.1 Preloaded for the double nuts

When an axial load P of approximately three times of preload load P_{PL} is exerted, for the purpose of eliminating the preload P_{PL} on nut B, please set the preload load P_{PL} at no more than 1/3 of the maximal preload. (0.25Ca should be taken as the standard maximal preload load) With respect to the displacement malue, it should be of 1/2 of the single nut displacement when axial load is three times of the preload.

$$K_N = \frac{P}{\delta_{NW}} = \frac{3P_{PL}}{\delta_{NS/2}} = \frac{6P_{PL}}{\delta_{NS}} \text{ (kgf/mm)}$$

δ_{NS} : Displacement of single nut(mm)

δ_{NW} : Displacement of doulbe nuts(mm)

(Explancement of the rigidity of double nuts)

As show in Fig 1.7.1 and 1.7.2, when a preload P_{PL} is applied on the 2 nuts A, B, both nuts A, B would produce flexural deformations that will reach point X. If an external force P is exerted from here, nut A would move from point X to point X_1, while nut B would move from X to X_2.

Then, based on the computing formula for displacement δ_{NS} of the single nut, we can obtain :

$\delta_0 = aP_{PL}^{\frac{2}{3}}$

while displacements of nuts A, B are $\delta_A = aP_{PL}^{\frac{2}{3}}$

since displacements of nuts A, B generated due to exertion of external force P are equal, therefore

$\delta_A - \delta_0 = \delta_0 - \delta_B$

Or if P is the only external force P applied on nuts A, B, if P_A increases.

$P_A - P_B = P$

$\delta_B = 0$

For preventing the external force applied on nut B being abosorbed by nut A thus decreaseing, so when $\delta_B = 0$

$aP_A^{\frac{2}{3}} - aP_{PL}^{\frac{2}{3}} = aP_{PL}^{\frac{2}{3}}$

$P_A^{\frac{2}{3}} = 2P_{PL}^{\frac{2}{3}}$

$P_A = \sqrt{8}\,P_{PL} \fallingdotseq 3P_{PL}$

or based on $\delta_A - \delta_0 = \delta_0$

$\delta_0 = \frac{\delta_A}{2}$

thus it can also be judged from Fig 1.7.3 that, with 1／2 displacement, the rigidity is two times as high.

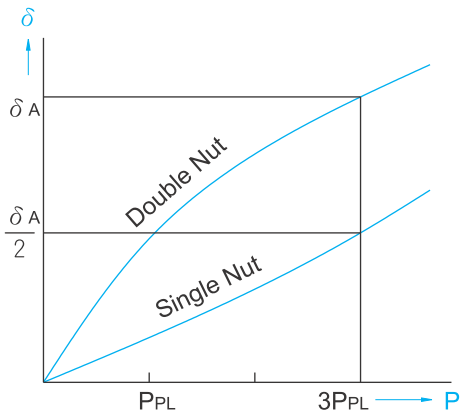

Fig 1.7.3

(3) Axial rigidity K_B and displacement δ_B of support shaft

$K_B = \frac{P}{\delta_B}$ (kgf／mm)

The rigidity of the assemble diagonal thrust bearind that is used as the support bearing for the ball screw and is widely unilized in the field of precision machines can be found from the following formula.

$\delta_B = \frac{2}{\sin\beta}\left(\frac{Q^2}{d}\right)^{\frac{1}{3}}$

$Q = \frac{P}{n \cdot \sin\beta}$ (kgf)

Q：Load of one steel ball (kgf)

n：Number of steel balls

β：Angle of contact (45°)

P：Axial load (kgf)

d：Steel ball diameter (mm)

ℓa：Effective stroke

(4) Axial rigidity K_H and displacement of δ_H portions of nuts and bearings. In early stage of machine development, special attentions should be paid to the requirement of high rigidity for the installation portion.

$K_H = \frac{P}{\delta_H}$ (kgf／mm)

1-8 Positioning Accuracy

Among the factors that cause feed accuracy errors, lead stroke accouracy and feed system rigidity are the key points for review, while other factors such as heat deformation due to temperature rise as well as assenbly accuracy for the guiding surface, etc. should also be into consideration.

1-8-1 Accuracy Selection

Table 1.8.1 shows the recommended application ranges for various ball screws accuracy classes based on different.

Table 1.8.1 Examples of ball screws accuracy classes for different uses

Application			Accuracy Grade						
			C0	C1	C2	C3	C5	C7	C10
NC Machine Tools	Lathe	X	○	○	○	○	○	○	
		Y				○	○	○	
	Milling Machine Boring Machine	XY		○	○	○	○	○	
		Z			○	○	○	○	
	Machine Center	XY		○	○	○	○		
		Z			○	○	○		
	Jig Borer	Y	○	○					
		Z	○	○					
	Drilling Machine	XY				○	○	○	
		Z					○	○	
	Grinding Machine	X	○	○	○	○	○	○	
		Z		○	○	○	○	○	
	Electro-discharge Machine (EDM)	XY		○	○	○	○	○	
		(Z)			○	○	○	○	
	Wire Cut (EDM)	Y		○	○	○			
		UV		○	○	○	○	○	
	Punching Press	XY				○	○	○	
	Laser Cutting Mathine	XY				○	○		
		Z				○	○		
	Wood Working Machine					○	○	○	○
Machines of General use and special Use					○	○	○	○	○
Semiconductor Machines	Explosure Equipments		○	○					
	Chemical Treatment					○	○	○	○
	Wire Bonder			○	○	○			
	Prober		○	○	○	○			
	Inserter				○	○	○	○	
	PCB Driller			○	○	○	○	○	
Industrial Robots	Orthogonal Type	As'sy		○	○	○	○	○	
		Others					○	○	○
	Muliti-joints Type	As'sy			○	○	○		
		Others				○	○	○	
	SCARA Type				○	○	○	○	
Machines for Steel molding							○	○	○
Injection Molding Machines							○	○	○
Three-Dimensonal Measuring Machines			○	○	○				
Business Machines							○	○	○
Patterm Image Machines			○	○					
Nuclear	Rod Control					○	○	○	
	Mechnaical Snubber							○	○
Aircrafts						○	○		

1-8-2 Countermeasure Against Thermal Displacement

Thermal displacement of the screw shaft results in deterioration of the positioning accuracy. The magnitude of the thermal displacement is calculated as follows :

$\triangle \ell = \alpha \cdot \triangle t \cdot L$

$\triangle \ell$: Thermal displacement

α : Coefficient of thermal expansion

$\triangle t$: Temperature rise (deg) at screw shaft

L : Screw shaft length

Namely, the screw shaft develops elongation of 12 μm per 1m when the temperature rises by 1°C. The ball screw, which lead has been machined to high accuracy, may fail to meet high level requirments because of the thermal displacement due to temperature rise. As the ball screw is operated at higher speeds, the heat generation grows to increase the influence of temperature.

T

- Optimization of preload
- Correct selection and supply of lubricant
- Increase in ball screw lead, with reduced rotation speed

- Hollow screw shaft to allow cooling fluid to flow through
- Cooling of screw shaft exterior with cooling oil or air

High-speed warming up for use in a temperature stabilized size :

- Operates after the temperature become stable
- Pre-tension od screw shaft
- Negative travel compensation of cumulative lead
- Use of closed loop

1-9 Life Design

1-9-1 Life of Ball Screws

Even the ball screw is used under correct conditions, it would still fail after a period of time due to deteriotation. The elapse of time until is out of service is called the service life of the screw, which is generally classified into the fatigue life when delamination phenomenon occurs and the accuracy deterioation life caused by wear-out, etc.

1-9-2 Basic Static Load Rating Coa

The basic load rating is an axial static load which will produce a permanent deformation at contact points of the balls to ball grooves equal to 0.01% of ball diameter.

1-9-3 Basic Dynamic Load Rating Ca

The basic dynamic load rating is an axial load which allow 90% of a group of identical ball screws (rotated under the same condition) to rotate without flaking for 10^6 revolutions.

This basic dynamic load rating is shown in the table of dimensions.

Relation between load and service life $L_\alpha = \left(\frac{1}{P}\right)^3$ L : Service life P : Load

1-9-4 Fatigue Life

Average load Pe

(1) When axial load keeps changing from time, please calcuate in order to find out the average load for the equivalent fatigue life under different load condition changes. (see Table 1.9.1)

$$Pe = \left(\frac{P_1^3 n_1 t_1 + P_2^3 n_2 t_2 + \ldots + P_n^3 n_n t_n}{n_1 t_1 + n_2 t_2 + \ldots + n_n t_n} \right)^{\frac{1}{3}} \text{(kgf)}$$

Axial Load (kgf)	Rotating Speed (min^{-1})	Time(%)
P_1	n_1	t_1
P_2	n_2	t_2
⋮	⋮	⋮
P_n	n_n	t_n

But, $t_1 + t_2 + t_3 + \ldots + t_n = 100$

Table 1.9.1 Service Life in Different Application.

Usage	Life in hours (h)
Working machines	20000
General industrial machines	10000
Automatic control machines	15000
Measurement machines	15000

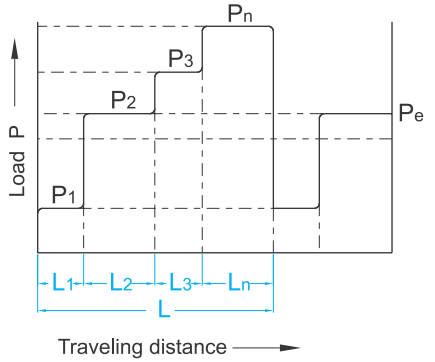

Fig 1.9.1

$$P_e = \frac{2P_{max} + P_{min}}{3} \text{ (kgf)}$$

P_{max} : Maximal axial load (kgf)

P_{min} : Minimal axial load (kgf)

(2) When load changes according to sine curve (see Fig 1.9.2)

$P_e \fallingdotseq 0.65\ P_{max}$ ..... (Fig A)

$P_e \fallingdotseq 0.75\ P_{max}$ ..... (Fig B)

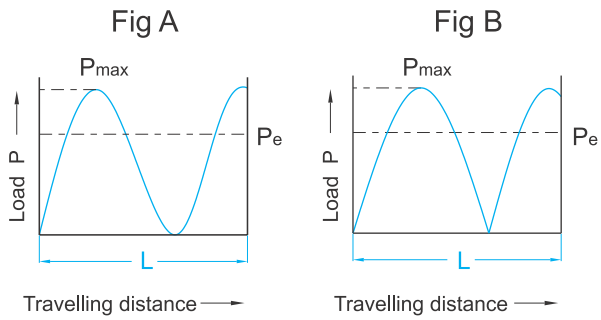

Fig 1.9.2

1-9-5 Calculation of Life

The fatigue life is generally expressed by the total number of revolutions. The total rotation hours or total travel distance may also be used to express life. The fatigue life is calualated as follow :

$$L = \left(\frac{C_a}{P_a \cdot f_w} \right)^3 \cdot 10^6 \qquad L_t = \frac{L}{60n} \qquad L_s = \frac{L \cdot \ell}{10^6}$$

Where

L : Rated fatigue life (rev)

L_s : Life in travel distance (km)

P_a : Axial (kgf)

f_w : Load factor (Factor depending on operation conditions)

L_t : Life in hours (h)

C_a : Basic dynamic load rating (kgf)

n : Rotating speed (rpm)

ℓ : Lead (mm)

Table 1.9.2 Load Factor (f_w)

Vibration and impact	Velocity (V)	f_w
Very Slight	Very Low V≦0.25 m/s	1~1.2
Slight	Low 0.25＜V≦1 m/s	1.2~1.5
Moderate	Medium 1＜V≦2 m/s	1.5~2
Strong	High V＞2 m/s	2~3.5

Table 1.9.3 Factor of Safety (f_s)

Usage	Operation	f_s
Industrial machines	Normal operation	1.0 ~ 1.3
	Operation with impact and vibration	2.0 ~ 3.0
Work machines	Normal operation	1.0 ~ 1.5
	Operation with impact and vibration	2.5 ~ 7.0

Basic Dynamic Load Rating Ca

$C_a = P_e \cdot f_s$

Basic Static Load Rating Coa

$C_{oa} = P_{max} \cdot f_s$

Key Points for Ball Screws Selection

When ball screws are subjected to selection, it is a most fundamental rule that you must first clearly find out what the operation conditions are before going ahead with the final design. Moreover, the elements of your selection include load weight, stroke, torque, position determination accuracy, tracking motion, hardness, lead stroke, nut inside diameter, etc., all elements are mutually related, any change to one of the elements will lead to the changes of other elements, special attention should always be paid to the balance among the elements.

Calculation for Ball Screws Selection

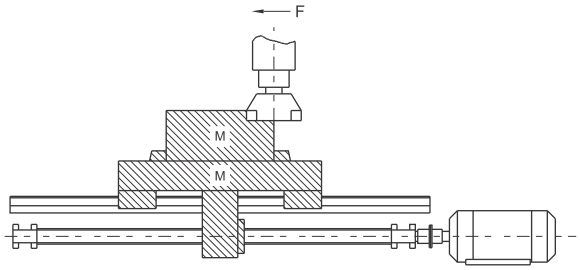

D

1. Working table weight 300 Kg
2. Working object weight 400 Kg
3. Maxima 700 mm
4. Fast feed speed 10 m／min
5. Minimal disassembly ability 10 μm／stroke
6. Driving motor DC motor (MAX 1000 min^{-1})
7. Guiding surface friction coefficient (μ = 0.05~0.1)
8. Running rate 60 %
9. Accuracy review items
10. Inertia generated during acceleration/deceleration can be neglected because the time periods involved are comparatively small.

1. Setting of operation conditions

(a) Machine service life time reckoning of H (hr)

H = [ ] hours／day [ ] days／year [ ] life years [ ] Running

(b) Mechanical conditions

calculation Date / Difference Operations	Speed/rotations	Cutting resistance	Sliding resistance	Time used
Fast feed	m／min／min^{-1}	kgf	kgf	%
Light cutting	／			
Medium cutting	／			
Heavy cutting	／			

(c) Position determination accuracy

Feed accuracy error factor includes load accuracy and system rigidity. Thermal displacement due to heat generation and positional error of the guide system are also important factors.

1. Setting of operation conditions

(a) Machine service life time reckoning of H (hr)

H = 12 hr · 250 days · 10 years · 0.6 Running

= 18000 hr

(b) Mechanical conditions

calculation Date / Difference Operations	Speed/rotations	Cutting resistance	Sliding resistance	Time used
Fast feed	10 m／min／1000 min^{-1}	0 kgf	70 kgf	10 %
Light cutting	6／600	100	70	50
Medium cutting	2／200	200	70	30
Heavy cutting	1／100	300	70	10

Sliding resistance = (300 + 400) · 0.1 = 70 kgf

Key Points for Ball Screws Selection	Calculation for Ball Screws Selection
2. Ball screw lead stroke ℓ (mm) $\ell = \dfrac{\text{Fast feed stroke (m/min)} \cdot 1000}{\text{Max. Rotating speed (min}^{-1}\text{) of motor}}$ (mm)	2. Ball screw lead stroke ℓ (mm) $\ell = \dfrac{10000}{1000} = 10$ (mm) Minimal disassembly = $\dfrac{10\text{mm}}{1000 \text{ stroke}}$ = 0.01 mm/stroke
3. Computation of average load Pe (kgf) $P_e = \left(\dfrac{P_1^3 n_1 t_1 + P_2^3 n_2 t_2 + \ldots + P_n^3 n_n t_n}{n_1 t_1 + n_2 t_2 + \ldots + n_n t_n} \right)^{\frac{1}{3}}$ $P_e = \dfrac{2P_{max} + P_{min}}{3}$ $P_e \fallingdotseq 0.65\ P_{max}$ $P_e \fallingdotseq 0.75\ P_{max}$	3. Computation of average load Pe (kgf) $P_e = \left(\dfrac{70^3 \cdot 1000 \cdot 10 + 170^3 \cdot 600 \cdot 50 + 270^3 \cdot 200 \cdot 30 + 370^3 \cdot 100 \cdot 10}{1000 \cdot 10 + 600 \cdot 50 + 200 \cdot 30 + 100 \cdot 10} \right)^{\frac{1}{3}}$ $= \left(\dfrac{31.7 \cdot 10^{13}}{4.7 \cdot 10^{4}} \right)^{\frac{1}{3}}$ $\fallingdotseq 189$ kgf
4. Average number of rotations n_m $n_m = \dfrac{n_1 t_1 + n_2 t_2 + \ldots + n_n t_n}{100}$	4. Average number of rotations n_m $n_m = \dfrac{1000 \cdot 10 + 600 \cdot 50 + 200 \cdot 30 + 100 \cdot 10}{100}$ $= \dfrac{4.7 \cdot 10^{4}}{100} = 470\ \text{min}^{-1}$
5. Calculation of required dynamic rated load Ca Ca = Pe · fs	5. Calculation of required dynamic rated load Ca Ca = 189 · 5 = 945 (kgf)
6. Calculation of required static rated load Coa Coa = Pmax · fs	6. Calculation of required static rated load Coa Coa = 369 · 5 = 1845 (kgf)
7. Selection of nut type Ca > 945 Coa > 1845 Select the nut types with basic dynamic rated load and and basic static rated load as specified above.	7. Selection of nut type Choose SFNI 2510 on the catalogue Ca = 2954 (kgf) Coa = 7295 (kgf)

Key Point for Ball Screws Selection	Calculation for Ball Screws Selection
8. Calculation of life confirmation Lt (h) $L_t = \frac{L}{60n} = \left(\frac{C_a}{P_e \cdot f_w}\right)^3 \cdot 10^6 \cdot \frac{1}{60n}$	8. Calculation of life confirmation Lt (h) $L_t = \left(\frac{2954}{189 \cdot 2}\right)^3 \cdot 10^6 \cdot \frac{1}{60 \cdot 470} = 42544(h)$
9. Mounting distance of screw length	9. Mounting distance of screw length 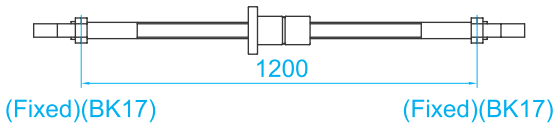
10. Determination of screw length Screw length = Maximal stroke + Nut length + Two reserved length at shaft end	10. Determination of screw length Screw length = 700 + 85 + 76 + 76 = 937 mm 937 mm < 1200 mm
11. Permissible axial load	11. Permissible axial load Omitted because of F-F support
12. Permissible revolution speed n and dm $n = \alpha \cdot \frac{60\lambda^2}{2\pi L^2}\sqrt{\frac{EIg}{\gamma A}} = f\frac{dr}{L^2} \cdot 10^7$ (rpm) dm = Shaft dia · Maximal speed	12. Permissible revolution speed n and dm $n = \frac{21.9 \cdot 21.86 \cdot 10^7}{1200^2} = 3324\ min^{-1} < n_{max}$ dm = 25 · 1000 = 25000 < 50000
13. Countermeasure against thermal displacement $\triangle \ell = \alpha \cdot \triangle t \cdot L$ $\triangle \ell$: Thermal displacement α : Coefficient of thermal expansion $\triangle t$: Temperature rise (deg) at screw shaft L : Screw shaft length	13. Countermeasure against thermal displacement It is estimated there would be a temperature rise 2~5°C with the ball screws of the general machinery, take temperature rise of 2°C to computer the extension of ball screw. $\triangle \ell = \alpha \cdot \triangle t \cdot L = 11.7 \cdot 10^{-6} \cdot 2 \cdot 700mm$ $\fallingdotseq 0.016mm$ $F_p = \frac{EA\triangle \ell}{L}$ $= \frac{2.06 \cdot 10^4 \cdot \frac{\pi \cdot 21.86^2}{4} \cdot 0.016}{700} \fallingdotseq 177(kgf)$

Key Point for Ball Screws Selection	Calculation for Ball Screws Selection
14. Rigidity (1) Axial rigidity K_S and displacement δs of screw shaft $K_S = \frac{P}{\delta s}$ (kgf／mm) P : Axial load (kgf) $\delta_{SF} = \frac{PL}{4AE}$ (mm).....(with reference to page C20) (2) Axial rigidity K_N and displacement δs of nut $\delta_{NS} = \frac{K}{\sin\beta}\left(\frac{Q^2}{d}\right)^{\frac{1}{3}} \cdot \frac{1}{\zeta}$ (mm) $Q = \frac{P}{n \cdot \sin\beta}$ (kgf) $n = \frac{D_0 \pi m}{d}$ (each).....(with reference to page C21) (3) Axial rigidity K_B and displacement δ_B of bracing shaft $K_B = \frac{P}{\delta_B}$ (kgf／mm).....(with reference to page C22)	**14. Rigidity** Deviation can be corrected by estimating the temperature rise per extension of 0.016 mm, and taking into consideration of the pre-tension of 177 kgf. (1) Directional rigidity $\delta_{SF} = \frac{PL}{4AE} = \frac{27 \cdot 1200}{4 \cdot \frac{\pi \cdot 21.86^2}{4} \cdot 2.06 \cdot 10^4}$ $= 0.00105$ (mm) $K_s = \frac{370}{0.00105} = 3.5 \cdot 10^5$ kgf／mm (2) Rigidity of steel ball and nut groove $n = \frac{26.62 \cdot \pi \cdot 4}{4.762} = 70$ $Q = \frac{370}{70\sin 45^\circ} = 10$ $\delta_{NS} = \frac{0.00057}{\sin 45^\circ}\left(\frac{10^2}{4.762}\right)^{\frac{1}{3}} \cdot \frac{1}{0.7}$ $= 3.2 \cdot 10^{-3}$ mm $K_N = \frac{370}{3.2 \cdot 10^{-3}} = 1.27 \cdot 10^5$ kgf／mm (3) Rigidity of support bearings Where, nut rigidity 50 kgf／μm $\delta_B = \frac{370}{51 \cdot 2} = 3.6\,\mu$m $K_B = \frac{370}{0.0036} = 1 \cdot 10^5$ kgf／mm ● $\delta_{TOTAL} = 1.05 + 3.2 + 3.6 = 7.85\,\mu$m
15.Confirmation of the ball screw life	**15.Confirmation of the ball screw life** L = 42544 (h) > 18000 (h)

1-10 Cautions About Use of Ball Screws

Ball screw assemblies are delicate components therefore; extra care must be taken to prevent the ball track from small particle and damages that caused by edged component or tools. Disassembling ball screw assembly without guidance or over travelling are strongly prohibited, if dismantle occurs, permanent damage will take place, please contact TBI Motion for after service. (as per Fig 1.10.1)

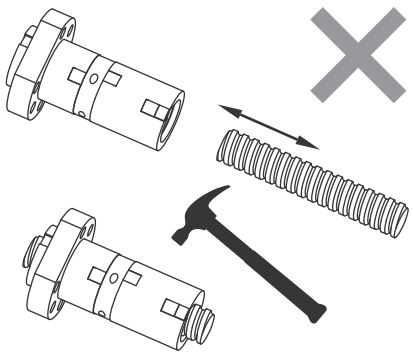

Fig 1.10.1 Error installation

If disassembling is required, use the mandrel attached to ensure that steel balls does not fall. (Please refer to page C33)

1-10-1 Lubrication

Adequate lubrication must be provided when ball screw is used, insufficient lubrication will result in contact of metal, which in turn leads to increase of friction and friction loss, thus cause failure or shortening of service life.

Lubricants applied to ball screws can be divided into 2 types, namely lubricating oil and consistent grease. In general speaking, in respect of maintenance, consistent grease will lead to increase of dynamic friction torque linearly along with increase of rotating speed, hence oil lubrication is deemed the better way when speed exceeds 3-5 m/min; however, don't forget the fact that there have been examples that using grease has been capable of achieving speed of 10 m／min, with respect to the equipment.

Table 1.10.1 Inspection of lubrication and interval of refill

Method	Interval	Check Item	Replenish or Change Interval
Auto. Intermittent oil supply	Weekly	Oil level, contamination	Add at each check, as required depending on tank level
Grease	Initially 2~3 months	Contamination on entry of chip	replenish yearly or according to the inspection result.
Oil bath	Daily	Oil level	To be determined according to consumption

1-10-2 Dust Proof／Prevention

Any foreign matter or water, if allowed to enter the ball screw, may increase friction and cause damage.For example, the entry of chips or cutting oil may be expected with machine tools depending on the work environment. Where entry of foreign matter is anticipated, use a bellows or telescopic cover as shown in Fig 1.10.2, to cover the screw shaft completely.

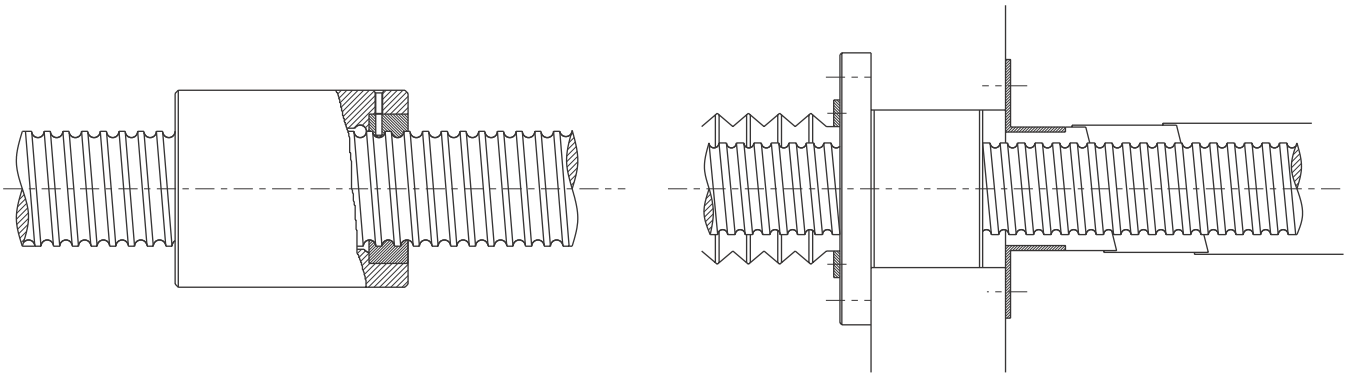

Fig 1.10.2 Dust proof Method by Telescopic Cover and Bellows

1-10-3 Offset Load

When offset load phenomenon occurs, screw life and noise tend to be directly affected, which would usually be accompanied with hand feel of rough running. In the event unload running and running right after assembling demonstrate different degree of cases, this should be ascribed to the poor assembly accuracy which will produce offset load phenomenon as shown in Fig 1.10.3

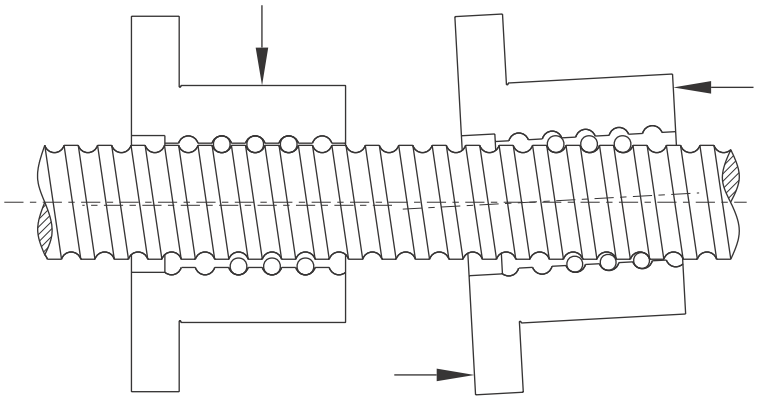

Fig 1.10.3 Offset Load

1-10-4 Assembling the Ball Screws

If ball nut is shipped un-assembled please follow the procedure as below.

Table 1.10.2 Procedure

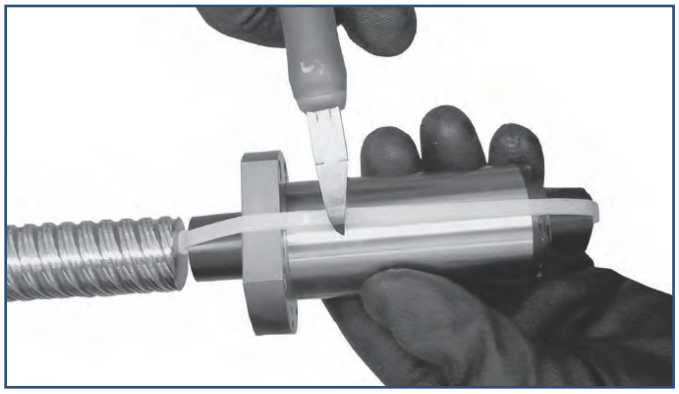

(1) Remove the band.

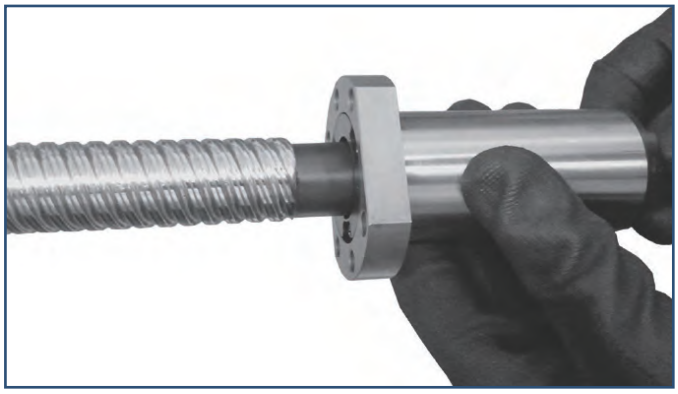

(2) Attached the mandrel towards machine ends.

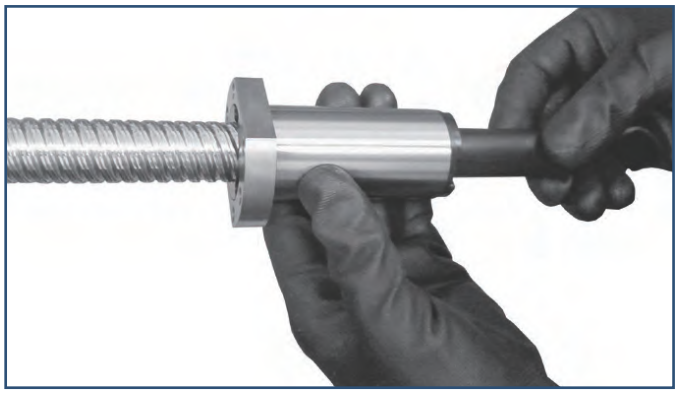

(3) Rotate the ball nut into the screw along the thread.

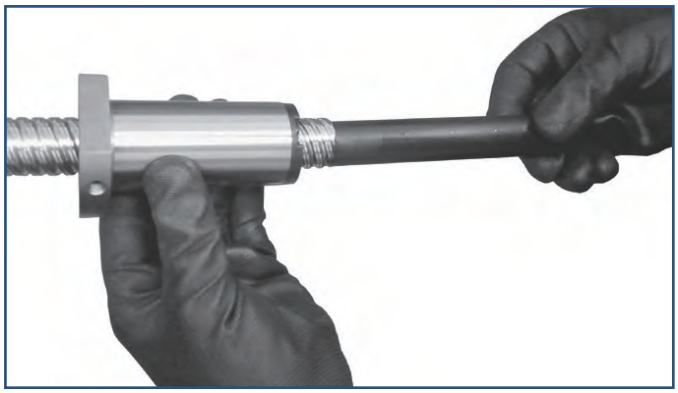

(4) Ensure that the ball nut is fully inserted before remove the mandrel.

1-10-5 Machining Specifications

(1) For the Ball Screws with internal ball circulation ball nut, it is required to have at least one end with complete thread to the end of screw, it is also required to have the journal area is with diameter to be smaller than the diameter of thread root as Fig 1.10.4 shown.

(2) The thread on screw shaft are hardened by induction hardening. It shall cause about 10~20mm at both ends journal purpose. The unhardened area will be labeled.

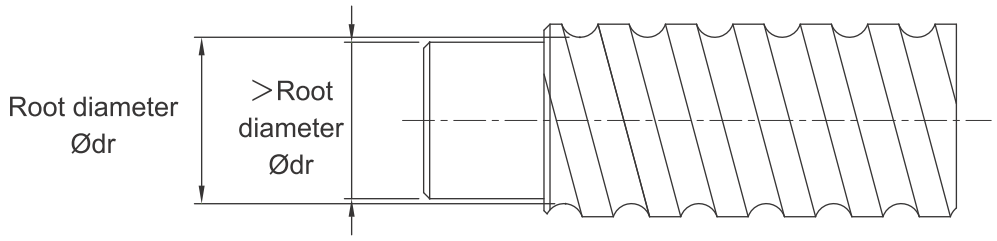

Fig 1.10.4 For Internal Circulation

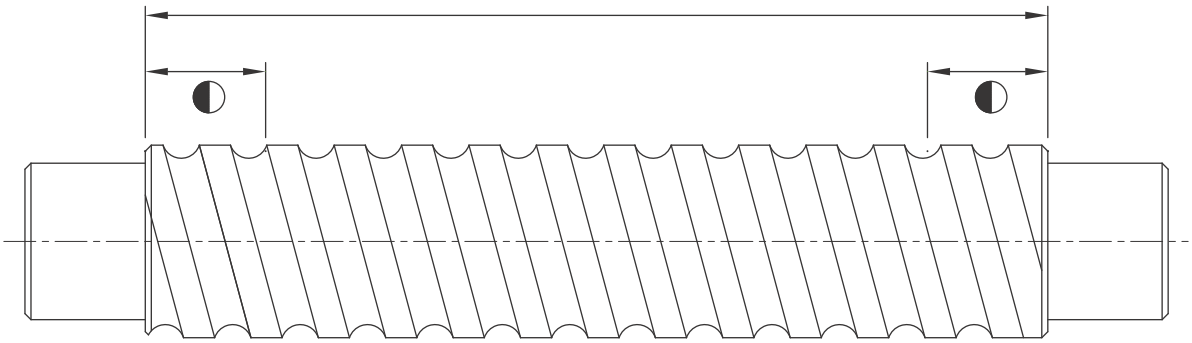

Fig 1.10.5 Harden Area

2. *TBI MOTION* Ball Screw

2-1 Nominal Model Code of Ball Screw

SFU R 025 05 T4 D G C5 - 600 - P1 - B2+N3 N3

Nominal Model

S
- S : Single nut
- D : Double nut
- O : OFF set double nut

F
- F : With flange
- C : Without flange

U
- NI : NI type nut
- NU : NU type nut
- H : H type nut
- Y : Y type nut
- V : V type nut
- U : DIN nut
- M : M type nut
- K : K type nut

Threading Direction
R : Right L : Left

Nominal Diameter
Unit : mm

Lead
Unit : mm

Number of Turns (Turn · Row)
Turn : T : 1 A : 1.5 (or 1.7/1.8) B : 2.5/2.8 C : 3.5 D : 4.8
ex : (2.5 · 2 = B2)

Flange Type
N : Not cutting S : Single cutting D : Double cutting

Product Code
G : Ground F : Rolled

Accuracy Grade
C0, C1, C2, C3, C5, C7, C10

Overall Length of Shaft
Unit : mm

Axial Clearance and Preload Value
P0, P1, P2, P3, P4

Number of Nut
(Leave blank if only one nut is required) Ex : Two install two nuts in a shaft : B2

Nut Surface Treatment
S : Standard B1 : Black Oxidation N1 : Hard Chrome Plating P : Phosphating
N3 : Nickel Plating N4 : Raydent N5 : Balck Chrome Plating

Shaft Surface Treatment
S : Standard B1 : Black Oxidation N1 : Hard Chrome Plating P : Phosphating
N3 : Nickel Plating N4 : Raydent N5 : Balck Chrome Plating

※ No symbol required when no plating is need.
※ An inspection report is provided for ground ball screws with an accuracy higher than C5.

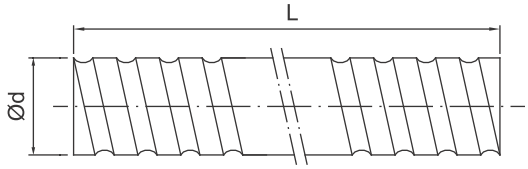

Fig 2.1.1 Screw Shaft Nominial Diameter

Table 2.1.1 Ground Ball Screw Specifications Ø4~32

Unit：mm

Model No.			Accuracy Grade	Threading Direction	Number of Grooves	Standard Code of Shaft	Type of Nut
Ød	l	Da		R : Right L : Left			
4	1	0.8	C7, C5, C3	R	1	SCR00401	K
6	1	0.8	C7, C5, C3	R	1	SCR00601	K
8	1	0.8	C7, C5, C3	R／L	1	SCR00801	K
	2	1.2	C7, C5, C3	R／L	1	SCR00802	K
	2.5	1.2	C7, C5, C3	R	1	SCR0082.5	K, BSH
10	2	1.2	C7, C5, C3	R／L	1	SCR01002	K, BSH
	4	2	C7, C5, C3	R	1	SCR01004	K, BSH
12	2	1.2	C7, C5, C3	R／L	1	SCR01202	K
	4	2.5	C7, C5, C3	R	1	SCR01204	NU, BSH
	5	2.5	C7, C5, C3	R	1	SCR01205-A	V, NU, BSH, H
	5	2.5	C7, C5, C3	R	1	SCR01205-B	K
	10	2.5	C7, C5, C3	R	2	SCR01210-B	V
14	2	1.2	C7, C5, C3	R／L	1	SCR01402	K
	4	2.5	C7, C5, C3	R	1	SCR01404	BSH
16	2	1.2	C7, C5, C3	R／L	1	SCR01602	K
	4	2.381	C7, C5, C3	R	1	SCR01604(N)	V, NI, NU, BSH
	5	3.175	C7, C5, C3	R／L	1	SCR01605	V, NI, NU, BSH
	10	3.175	C7, C5, C3	R／L	2	SCR01610	V, NI, NU, BSH
	16	2.778	C7, C5, C3	R	2	SCR01616	Y
	32	2.778	C7, C5, C3	R	2	SCR01632	Y
20	4	2.381	C7, C5, C3	R	1	SCR02004(N)	V, NI, NU
	5	3.175	C7, C5, C3	R／L	1	SCR02005	V, NI, NU, BSH, H
	10	3.969	C7, C5, C3	R	1	SCR02010	V
	20	3.175	C7, C5, C3	R	2	SCR02020	V, Y, H
	40	3.175	C7, C5, C3	R	2	SCR02040	Y
25	4	2.381	C7, C5, C3	R	1	SCR02504(N)	NI, NU
	5	3.175	C7, C5, C3	R／L	1	SCR02505	V, NI, NU, BSH, H
	6	3.969	C7, C5, C3	R	1	SCR02506	V, NU
	8	4.762	C7, C5, C3	R	1	SCR02508	V, NU
	10	4.762	C7, C5, C3	R	1	SCR02510-A	NI, NU, BSH
	10	6.35	C7, C5, C3	R	1	SCR02510-B	V
	25	3.969	C7, C5, C3	R	2	SCR02525	V, Y
	50	3.969	C7, C5, C3	R	2	SCR02550	Y
32	4	2.381	C7, C5, C3	R	1	SCR03204(N)	V, NI, NU
	5	3.175	C7, C5, C3	R／L	1	SCR03205	V, NI, NU, M, H
	6	3.969	C7, C5, C3	R	1	SCR03206	V, NU
	8	4.762	C7, C5, C3	R	1	SCR03208	V, NU
	10	6.35	C7, C5, C3	R／L	1	SCR03210	V, NI, NU
	20	6.35	C7, C5, C3	R	1	SCR03220	V
	32	4.762	C7, C5, C3	R	2	SCR03232	Y
	64	4.762	C7, C5, C3	R	2	SCR03264	Y

Table 2.1.2 Standard Specifications Ø4~80

Unit : mm

Model No.			Accuracy Grade	Threading Direction	Number of Grooves	Standard Code of Shaft	Type of Nut
Ød	l	Da		R : Right L : Left			
40	5	3.175	C7, C5, C3	R／L	1	SCR04005	V, NI, NU, H
	6	3.969	C7, C5, C3	R	1	SCR04006	V, NU
	8	4.762	C7, C5, C3	R	1	SCR04008	V, NU
	10	6.35	C7, C5, C3	R／L	1	SCR04010	V, NI, NU
	20	6.35	C7, C5, C3	R	2	SCR04020	V
	40	6.35	C7, C5, C3	R	2	SCR04040	Y
	80	6.35	C7, C5, C3	R	2	SCR04080	Y
50	5	3.175	C7, C5, C3	R	1	SCR05005	V, H
	10	6.35	C7, C5, C3	R／L	1	SCR05010	V, NI, NU
	20	9.525	C7, C5, C3	R	1	SCR05020	V
	50	7.938	C7, C5, C3	R	2	SCR05050	Y
	100	7.938	C7, C5, C3	R	2	SCR050100	Y
63	10	6.35	C7, C5, C3	R	1	SCR06310	V, NI, NU
	20	9.525	C7, C5, C3	R	1	SCR06320	V, NU
80	10	6.35	C7, C5, C3	R	1	SCR08010	V, NI, NU
	20	9.525	C7, C5, C3	R	1	SCR08020	V, NU

Table 2.1.3 H-type Specifications Ø12~50

Unit : mm

Model No.			Accuracy Grade	Threading Direction	Number of Grooves	Type-H Code of Shaft	Type of Nut
Ød	l	Da		R : Right L : Left			
16	5	2.778	C7, C5, C3	R	1	SSR01605	H
	10	2.778	C7, C5, C3	R	1	SSR01610	H
	16	2.778	C7, C5, C3	R	1	SSR01616	H
20	10	3.175	C7, C5, C3	R	1	SSR02010	H
25	10	3.175	C7, C5, C3	R	1	SSR02510	H
	25	3.175	C7, C5, C3	R	1	SSR02525	H
32	10	3.969	C7, C5, C3	R	1	SSR03210	H
	20	3.969	C7, C5, C3	R	1	SSR03220	H
40	10	6.35	C7, C5, C3	R	1	SSR04010	H
50	10	6.35	C7, C5, C3	R	1	SSR05010	H

※The information is for standard production, if other needs please contact ***TBIMOTION*** .

2-2 Precision Ground Ball Screw Series

2-2-1 *TBIMOTION* Nut of Precision Ground Ball Screw Type

	Nut Type	Flange Type
NH／H (High Speed/Strong dust-proof type)	SFNH／SFH 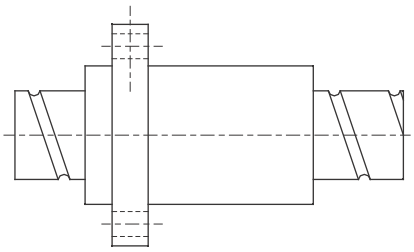 C43	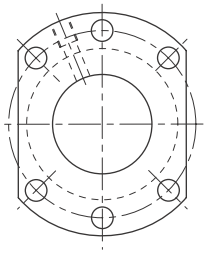 d≦32 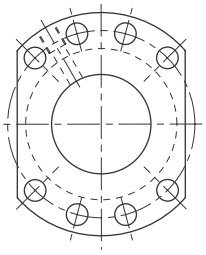 d≧40
CNH (Actuator type)	SCNH 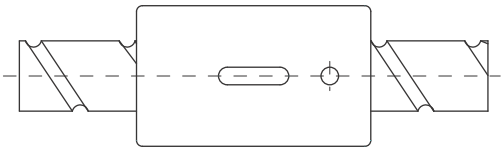 C44	No-Flange
NU／U (Strong dust-proof type)	SFNU／SFU 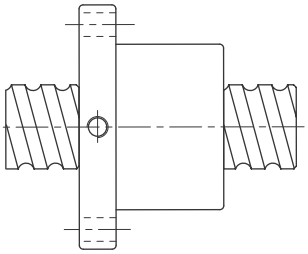 C45	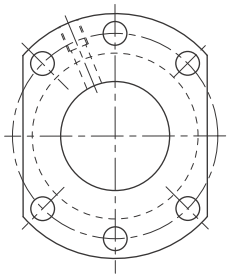 d≦32 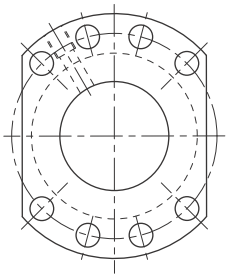 d≧40
OFU／U (OFF set double nut)	OFU／DFU 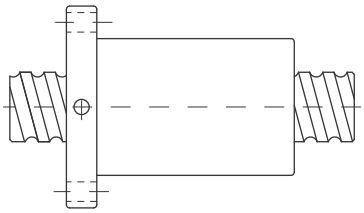 C46	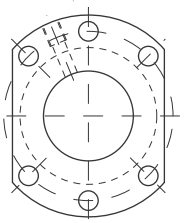 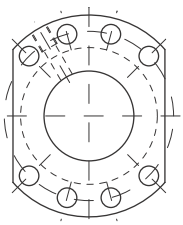

بلبرینگ اسکوئی

(اسکو صنعت تاوریژ)

OBC
Oskoyi Ballbearing Company

	Nut Type	Flange Type
NI／I (Strong dust-proof type)	SFNI／SFI 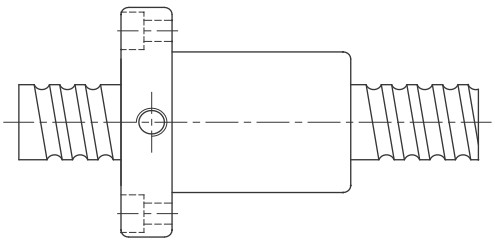 C47	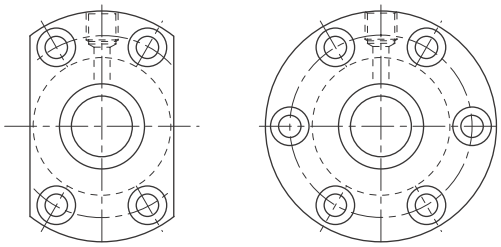
M (Design for Milling)	SFM 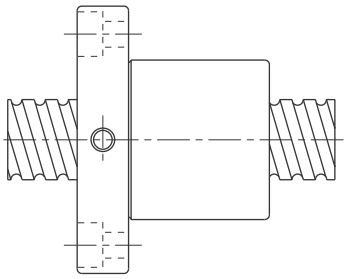 C47	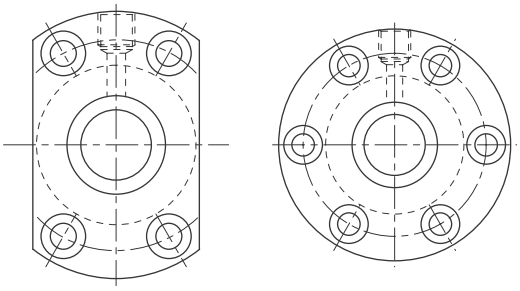
OFI／I (OFF set double nut)	OFI／DFI 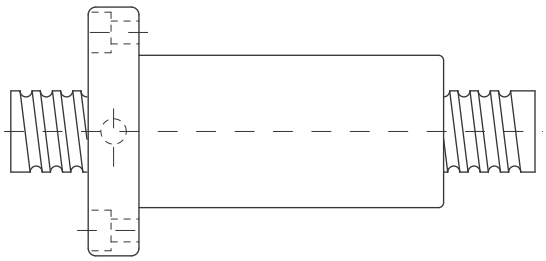 C48	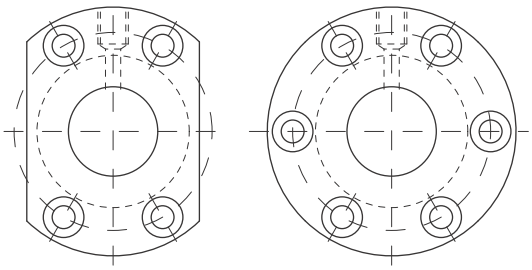
M (Design for Milling)	DFM 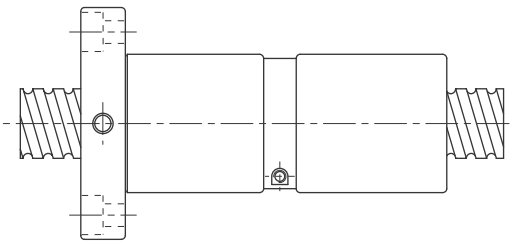 C48	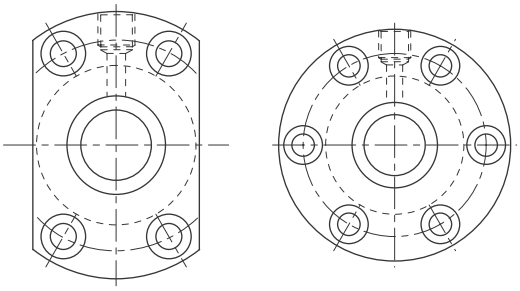

تلفن : (021) 33913364 - 33951660
فکس : (021) 33985603

	Nut Type	Flange Type
V (High Load External Circulation type)	SFV 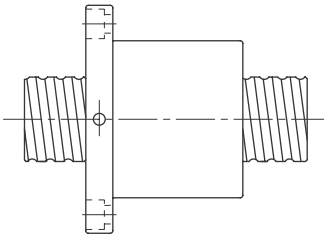 C49	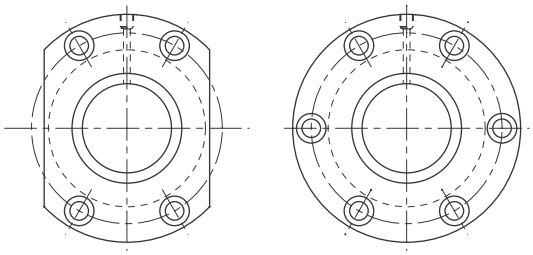
OFV (OFF set double nut)	OFV 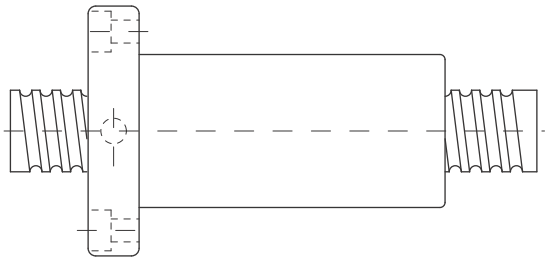 C50	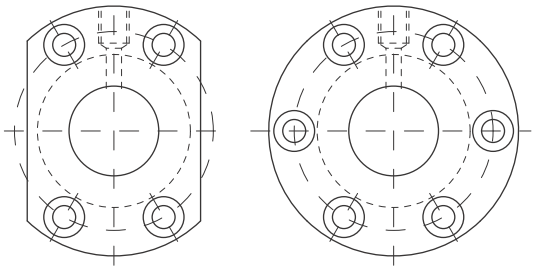
V (High Load External Circulation type)	DFV 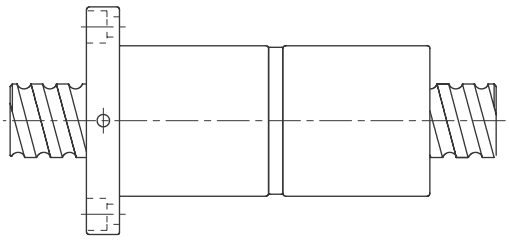 C50	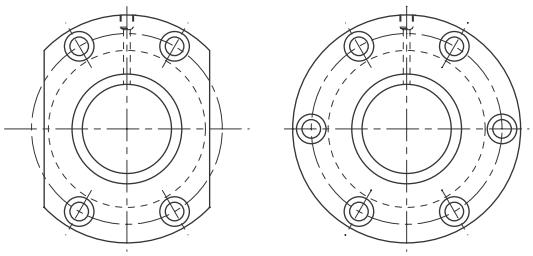
Y (High DM-N Rating)	SFY 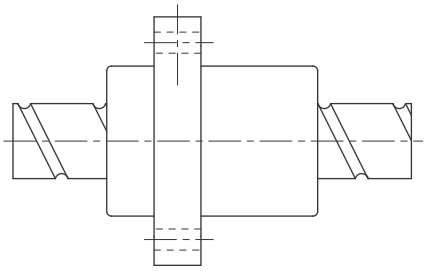 C51	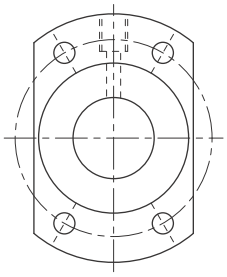

بلبرینگ اسکوئی

(اسکو صنعت تاوریژ)

OBC
Oskoyi Ballbearing Company

	Nut Type	Flange Type
S (High Speed / Low Noise type)	DFS 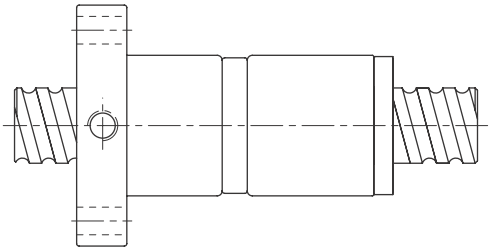 C52	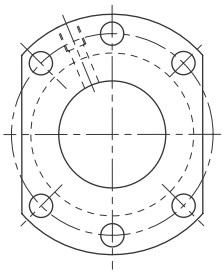 Model No.≦3232 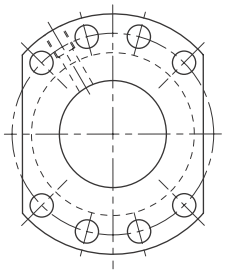 Model No.≧4005
CNI／I (Standard)	SCNI／SCI 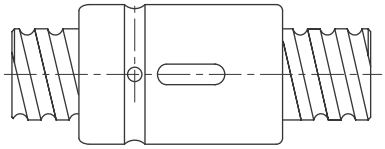 C53	No-Flange
K (Miniature type)	SFK 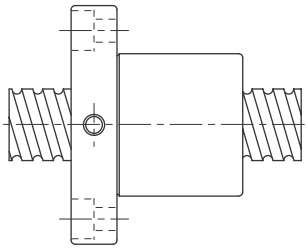 C54	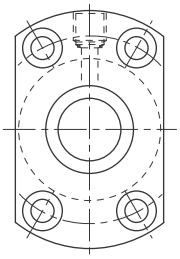 (SFK 01004) (SFK 02002) (SFK 02502)
	SFK 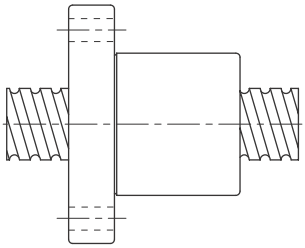 C54	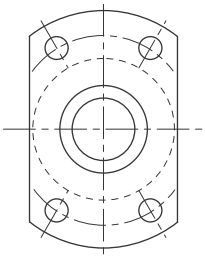

تلفن : (021) 33913364 - 33951660
فکس : (021) 33985603

Nut Type		Flange Type
BSH	BSH 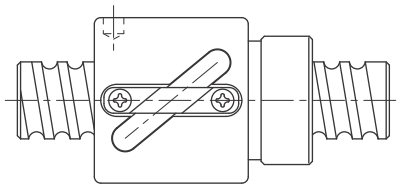 d≦12 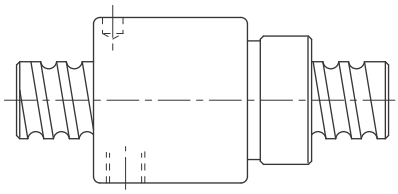 d≧14 C55	No-Flange
XSV (Design for factory automation)	XSV 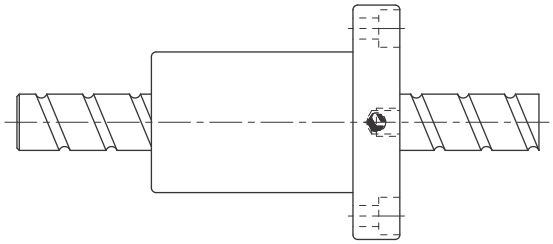 C56~60	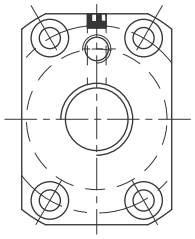

※The information is for standard production, if other needs please contact ***TBIMOTION***.

Table 2.2.1 Preload Chart

Preload	I, U, M-type	H-type	Y-type	V-type	BSH-type	K-type
P0						
P1	✓	✓	✓	✓	✓	✓
P2	✓	✓	✓	✓	✓	
P3	✓	✓	✓	✓	✓	
P4				✓		

بلبرینگ اسکوئی

(اسکو صنعت تاوریژ)

OBC
Oskoyi Ballbearing Company

SFNH／SFH (DIN 69051 FORM B) Series Specifications

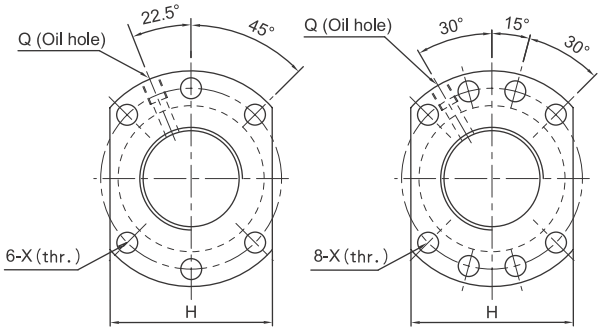

d≦32　　d≧40

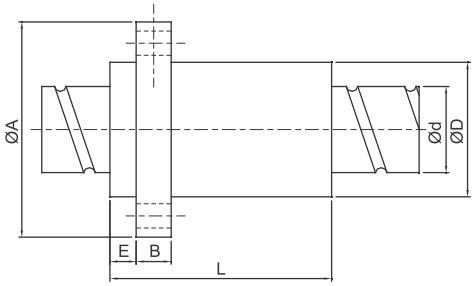

SFH

SFNH

Unit : mm

	Model No.	d	l	Da	Dimension										Load Rating		K kgf／μm
					D	A	E	B	L	W	H	X	Q	n	Ca (kgf)	Coa (kgf)	
★	SFH01205-2.8	12	5	2.5	24	40	5	10	30	32	30	4.5		2.8x1	661	1316	19
★	SFH01210-2.8		10	2.5	24	40	5	10	45	32	30	4.5		2.8x1	642	1287	19
★	SFH01605-3.8	15	5	2.778	28	48	5	10	37	38	40	5.5	M6	3.8x1	1112	2507	30
★	SFH01610-2.8		10	2.778	28	48	5	10	45	38	40	5.5	M6	2.8x1	839	1821	23
★	SFH01616-1.8		16	2.778	28	48	5	10	45	38	40	5.5	M6	1.8x1	552	1137	14
★	SFH01616-2.8		16	2.778	28	48	5	10	61	38	40	5.5	M6	2.8x1	808	1769	22
★	SFH01620-1.8		20	2.778	28	48	5	10	58	38	40	5.5	M6	1.8x1	554	1170	14
★	SFH02005-3.8	20	5	3.175	36	58	7	10	37	47	44	6.6	M6	3.8x1	1484	3681	37
★	SFH02010-3.8		10	3.175	36	58	7	10	55	47	44	6.6	M6	3.8x1	1516	3833	40
★	SFH02020-1.8		20	3.175	36	58	7	10	54	47	44	6.6	M6	1.8x1	764	1758	19
★	SFH02020-2.8		20	3.175	36	58	7	10	74	47	44	6.6	M6	2.8x1	1118	2734	29
★	SFH02505-3.8	25	5	3.175	40	62	7	10	37	51	48	6.6	M6	3.8x1	1650	4658	43
★	SFH02510-3.8		10	3.175	40	62	7	12	55	51	48	6.6	M6	3.8x1	1638	4633	45
★	SFH02525-1.8		25	3.175	40	62	7	12	64	51	48	6.6	M6	1.8x1	843	2199	22
★	SFH02525-2.8		25	3.175	40	62	7	12	89	51	48	6.6	M6	2.8x1	1232	3421	34
	SFH03205-3.8	32	5	3.175	50	80	9	12	37	65	62	9	M6	3.8x1	1839	6026	51
	SFH03210-3.8	31	10	3.969	50	80	9	12	57	65	62	9	M6	3.8x1	2460	7255	55
	SFH03220-2.8		20	3.969	50	80	9	12	76	65	62	9	M6	2.8x1	1907	5482	43
	SFH03232-1.8		32	3.969	50	80	9	12	80	65	62	9	M6	1.8x1	1257	3426	27
	SFH03232-2.8		32	3.969	50	80	9	12	112	65	62	9	M6	2.8x1	1838	5329	42
	SFH04005-3.8	40	5	3.175	63	93	9	15	42	78	70	9	M8	3.8x1	2018	7589	60
	SFH04010-3.8	38	10	6.35	63	93	9	14	60	78	70	9	M8	3.8x1	5035	13943	67
	SFH04020-2.8		20	6.35	63	93	9	14	80	78	70	9	M8	2.8x1	3959	10715	54
	SFH04040-1.8		40	6.35	63	93	9	14	98	78	70	9	M8	1.8x1	2585	6648	34
	SFH04040-2.8		40	6.35	63	93	9	14	138	78	70	9	M8	2.8x1	3780	10341	52
	SFH05005-3.8	50	5	3.175	75	110	10.5	15	42	93	85	11	M8	3.8x1	2207	9542	68
	SFH05010-3.8	48	10	6.35	75	110	10.5	18	60	93	85	11	M8	3.8x1	5638	17852	79
	SFH05020-3.8		20	6.35	75	110	10.5	18	100	93	85	11	M8	3.8x1	5749	18485	87
	SFH05050-1.8		50	6.35	75	110	10.5	18	120	93	85	11	M8	1.8x1	2946	8749	42
	SFH05050-2.8		50	6.35	75	110	10.5	18	170	93	85	11	M8	2.8x1	4308	13610	65

※★Actuator type available (SFNH series).

تلفن : (021) 33913364 - 33951660

فکس : (021) 33985603

SCNH Series Specifications

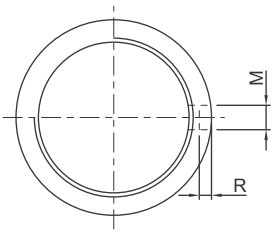

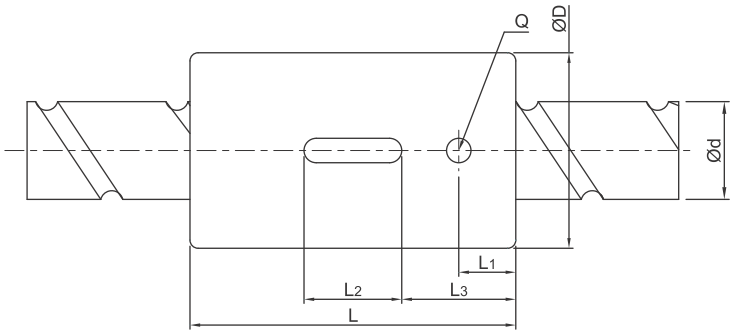

Unit : mm

Model No.	d	l	Da	Dimension									Load Rating		K kgf／μm
				D	L	L_1	L_2	L_3	M	R	Q	n	Ca (kgf)	Coa (kgf)	
SCNH01205-4.8	12	5	2.5	24	40	7	12	14	3	1.5	3	4.8x1	536	794	34
SCNH01210-2.8		10	2.5	24	45	8	15	15	3	1.5	3	2.8x1	642	1287	19
XCNH01210-1.8		10	2.5	24	40	10.5	12	14	3	1.5	3	1.8x1	422	771	33
SCNH01605-5.8	15	5	2.778	28	45	7	20	12.5	5	3	3	5.8x1	1599	3827	49
SCNH01610-2.8		10	2.778	28	45	7	20	12.5	5	3	3	2.8x1	839	1821	23
SCNH01616-1.8		16	2.778	28	45	7	20	12.5	5	3	3	1.8x1	552	1137	18
SCNH01620-1.8		20	2.778	28	58	10	20	19	5	3	3	1.8x1	808	1769	14
SCNH02005-5.8	20	5	3.175	36	47	8	20	13.5	5	3	3	5.8x1	2134	5619	60
SCNH02010-3.8		10	3.175	36	55	8	20	17.5	5	3	3	3.8x1	1516	3833	40
SCNH02020-1.8		20	3.175	36	55	8	20	17.5	5	3	3	1.8x1	764	1758	19

بلبرینگ اسکوئی

(اسکو صنعت تاوریژ)

OBC
Oskoyi Ballbearing Company

SFNU／SFU (DIN 69051 FORM B) Series Specifications

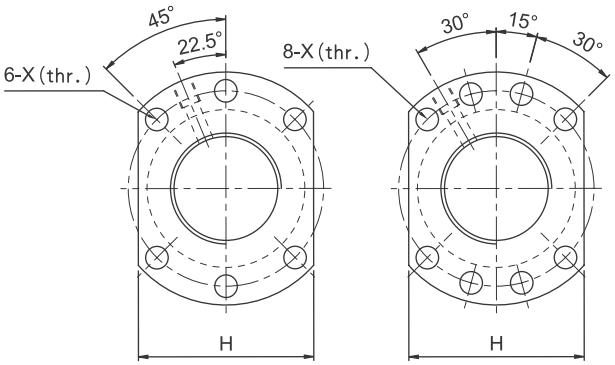

d≦32　　d≧40

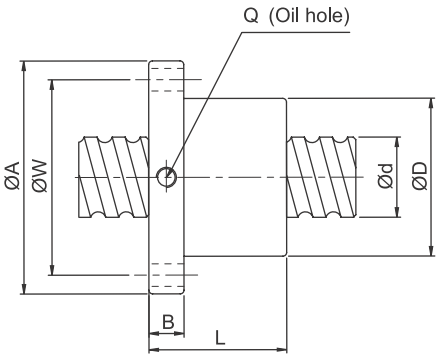

Unit: mm

Model No.	d	l	Da	Dimension									Load Rating		K kgf／μm
				D	A	B	L	W	H	X	Q	n	Ca (kgf)	Coa (kgf)	
SFNU01605-4	16	5	3.175	28	48	10	45	38	40	5.5	M6	1x4	1380	3052	32
SFNU01610-3		10	3.175	28	48	10	57	38	40	5.5	M6	1x3	1103	2401	26
SFNU02005-4	20	5	3.175	36	58	10	51	47	44	6.6	M6	1x4	1551	3875	39
SFNU02505-4	25	5	3.175	40	62	10	51	51	48	6.6	M6	1x4	1724	4904	45
SFNU02510-4		10	4.762	40	62	12	80	51	48	6.6	M6	1x4	2954	7295	50
SFNU03205-4	32	5	3.175	50	80	12	52	65	62	9	M6	1x4	1922	6343	54
SFNU03210-4		10	6.35	50	80	12	85	65	62	9	M6	1x4	4805	12208	61
SFNU04005-4	40	5	3.175	63	93	14	55	78	70	9	M8	1x4	2110	7988	63
SFNU04010-4		10	6.35	63	93	14	88	78	70	9	M8	1x4	5399	15500	73
SFNU05010-4	50	10	6.35	75	110	16	88	93	85	11	M8	1x4	6004	19614	85
SFNU06310-4	63	10	6.35	90	125	18	93	108	95	11	M8	1x4	6719	25358	99
SFNU08010-4	80	10	6.35	105	145	20	93	125	110	13.5	M8	1x4	7346	31953	109
SFU01204-4	12	4	2.5	24	40	10	40	32	30	4.5		1x4	902	1884	26
SFU01604-4	16	4	2.381	28	48	10	40	38	40	5.5	M6	1x4	973	2406	32
SFU02004-4	20	4	2.381	36	58	10	42	47	44	6.6	M6	1x4	1066	2987	38
SFU02504-4	25	4	2.381	40	62	10	42	51	48	6.6	M6	1x4	1180	3795	43
SFU02506-4		6	3.969	40	62	10	54	51	48	6.6	M6	1x4	2318	6057	47
SFU02508-4		8	4.762	40	62	10	63	51	48	6.6	M6	1x4	2963	7313	49
SFU03204-4	32	4	2.381	50	80	12	44	65	62	9	M6	1x4	1296	4838	51
SFU03206-4		6	3.969	50	80	12	57	65	62	9	M6	1x4	2632	7979	57
SFU03208-4		8	4.762	50	80	12	65	65	62	9	M6	1x4	3387	9622	60
SFU04006-4	40	6	3.969	63	93	14	60	78	70	9	M6	1x4	2873	9913	66
SFU04008-4		8	4.762	63	93	14	67	78	70	9	M6	1x4	3712	11947	70
SFU05020-4	50	20	7.144	75	110	16	138	93	85	11	M8	1x4	7142	22588	94
SFU06320-4	63	20	9.525	95	135	20	149	115	100	13.5	M8	1x4	11444	36653	112
SFU08020-4	80	20	9.525	125	165	25	154	145	130	13.5	M8	1x4	12911	47747	138
SFU10020-4	100	20	9.525	150	202	30	180	170	155	17.5	M8	1x4	14303	60698	162

تلفن : (021) 33913364 - 33951660
فکس : (021) 33985603

OFU／DFU (DIN 69051 FORM B) Series Specifications

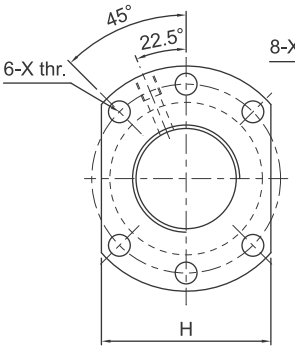

d≦32

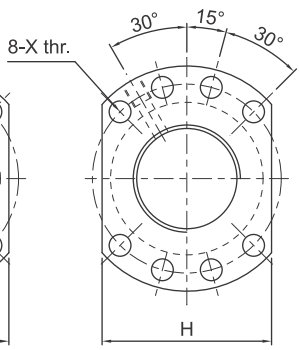

d≧40

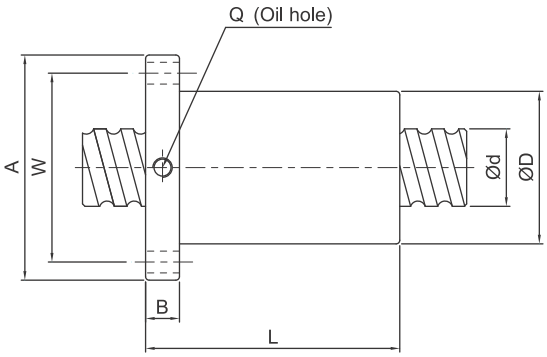

Unit：mm

Model No.	d	l	Da	Dimension									Load Rating		K kgf／μm
				D	A	B	L	W	H	X	Q	n	Ca (kgf)	Coa (kgf)	
OFU01605-4	16	5	3.175	28	48	10	75	38	40	5.5	M6	1x4	1380	3052	44
OFU02005-4	20	5	3.175	36	58	10	85	47	44	6.6	M6	1x4	1551	3875	53
OFU02505-4	25	5	3.175	40	62	10	86	51	48	6.6	M6	1x4	1724	4904	62
OFU02510-4		10	4.762	40	62	12	130	51	48	6.6	M6	1x4	2954	7295	67
OFU03205-4	32	5	3.175	50	80	12	87	65	62	9	M6	1x4	1922	6343	74
OFU03210-4		10	6.35	50	80	12	145	65	62	9	M6	1x4	4805	12208	82
OFU04005-4	40	5	3.175	63	93	14	90	78	70	9	M8	1x4	2110	7988	87
OFU04010-4		10	6.35	63	93	14	148	78	70	9	M8	1x4	5399	15500	99
OFU05010-4	50	10	6.35	75	110	16	148	93	85	11	M8	1x4	6004	19614	117
OFU06310-4	63	10	6.35	90	125	18	153	108	95	11	M8	1x4	6719	25358	139
OFU08010-4	80	10	6.35	105	145	20	153	125	110	13.5	M8	1x4	7346	31953	156
DFU01604-4	16	4	2.381	28	48	10	80	38	40	5.5	M6	1x4	973	2406	43
DFU02004-4	20	4	2.381	36	58	10	80	47	44	6.6	M6	1x4	1066	2987	51
DFU02504-4	25	4	2.381	40	62	10	80	51	48	6.6	M6	1x4	1180	3795	60
DFU02506-4		6	3.969	40	62	10	105	51	48	6.6	M6	1x4	2318	6057	64
DFU02508-4		8	4.762	40	62	10	120	51	48	6.6	M6	1x4	2963	7313	67
DFU03204-4	32	4	2.381	50	80	12	80	65	62	9	M6	1x4	1296	4838	71
DFU03206-4		6	3.969	50	80	12	105	65	62	9	M6	1x4	2632	7979	78
DFU03208-4		8	4.762	50	80	12	122	65	62	9	M6	1x4	3387	9622	82
DFU04006-4	40	6	3.969	63	93	14	108	78	70	9	M6	1x4	2873	9913	91
DFU04008-4		8	4.762	63	93	14	132	78	70	9	M6	1x4	3712	11947	96
DFU05020-4	50	20	7.144	75	110	16	280	93	85	11	M8	1x4	7142	22588	126
DFU06320-4	63	20	9.525	95	135	20	290	115	100	13.5	M8	1x4	11444	36653	152
DFU08020-4	80	20	9.525	125	165	25	295	145	130	13.5	M8	1x4	12911	47747	187
DFU10020-4	100	20	9.525	150	202	30	340	170	155	17.5	M8	1x4	14303	60698	222

بلبرینگ اسکوئی

(اسکو صنعت تاوریژ)

OBC
Oskoyi Ballbearing Company

SFNI／SFI Series Specifications

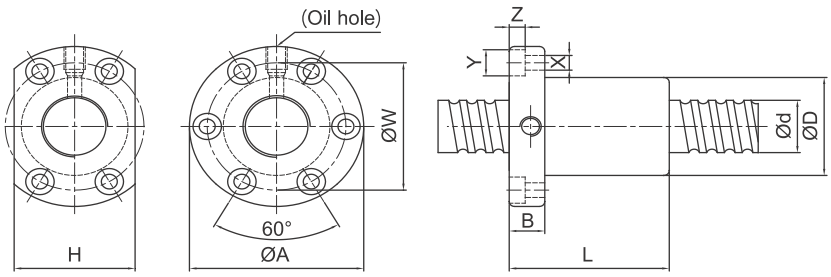

Unit:mm

Model No.	d	l	Da	Dimension											Load Rating		K kgf／μm
				D	A	B	L	W	H	X	Y	Z	Q	n	Ca (kgf)	Coa (kgf)	
SFNI01605-4	16	5	3.175	30	49	10	45	39	34	4.5	8	4.5	M6	1x4	1380	3052	33
SFNI01610-3		10	3.175	34	58	10	57	45	34	5.5	9.5	5.5	M6	1x3	1103	2401	27
SFNI02005-4	20	5	3.175	34	57	11	51	45	40	5.5	9.5	5.5	M6	1x4	1551	3875	39
SFNI02505-4	25	5	3.175	40	63	11	51	51	46	5.5	9.5	5.5	M8	1x4	1724	4904	45
SFNI02510-4		10	4.762	46	72	12	80	58	52	6.5	11	6.5	M6	1x4	2954	7295	51
SFNI03205-4	32	5	3.175	46	72	12	52	58	52	6.5	11	6.5	M8	1x4	1922	6343	52
SFNI03210-4		10	6.35	54	88	15	85	70	62	9	14	8.5	M8	1x4	4805	12208	62
SFNI04005-4	40	5	3.175	56	90	15	55	72	64	9	14	8.5	M8	1x4	2110	7988	59
SFNI04010-4		10	6.35	62	104	18	88	82	70	11	17.5	11	M8	1x4	5399	15500	72
SFNI05010-4	50	10	6.35	72	114	18	88	92	82	11	17.5	11	M8	1x4	6004	19614	83
SFNI06310-4	63	10	6.35	85	131	22	93	107	95	14	20	13	M8	1x4	6719	25358	95
SFNI08010-4	80	10	6.35	105	150	22	93	127	115	14	20	13	M8	1x4	7346	31953	109
SFI01604-4	16	4	2.381	30	49	10	45	39	34	4.5	8	4.5	M6	1x4	973	2406	32
SFI02004-4	20	4	2.381	34	57	11	46	45	40	5.5	9.5	5.5	M6	1x4	1066	2987	37
SFI0205T-4		5.08	3.175	34	57	11	51	45	40	5.5	9.5	5.5	M6	1x4	1550	3875	39
☆ SFI02504-4	25	4	2.381	40	63	11	46	51	46	5.5	9.5	5.5	M6	1x4	1180	3795	43
SFI0255T-4		5.08	3.175	40	63	11	51	51	46	5.5	9.5	5.5	M8	1x4	1724	4904	45
SFI03204-4	32	4	2.381	46	72	12	47	58	52	6.5	11	6.5	M6	1x4	1296	4838	49

SFM Series Specifications (Design for Milling)

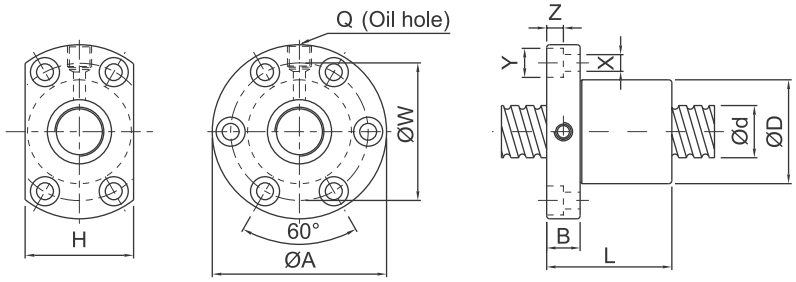

Unit:mm

Model No.	d	l	Da	Dimension											Load Rating		K kgf／μm
				D	A	B	L	W	H	X	Y	Z	Q	n	Ca (kgf)	Coa (kgf)	
☆ SFM03205-4	32	5	3.175	48	74	12	52	60	60	6.5	11	6.5	M8	1x4	1922	6343	53
☆ SFM0325T-4		5.08	3.175	48	74	12	53	60	60	6.5	11	6.5	M8	1x4	1922	6343	53

Note : For double ball screw nut order, please contact ***TBIMOTION*** in advance.

※☆Left helix available

تلفن : (021) 33913364 - 33951660

فکس : (021) 33985603

OFI／DFI Series Specifications

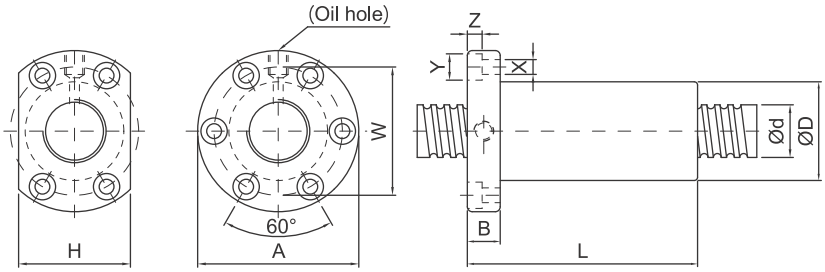

Unit：mm

Model No.	d	l	Da	Dimension											Load Rating		K kgf／μm
				D	A	B	L	W	H	X	Y	Z	Q	n	Ca (kgf)	Coa (kgf)	
OFI01605-4	16	5	3.175	30	49	10	75	39	34	4.5	8	4.5	M6	1x4	1380	3052	44
OFI02005-4	20	5	3.175	34	57	11	85	45	40	5.5	9.5	5.5	M6	1x4	1551	3875	52
OFI02505-4	25	5	3.175	40	63	11	86	51	46	5.5	9.5	5.5	M8	1x4	1724	4094	62
OFI02510-4		10	4.762	46	72	12	130	58	52	6.5	11	6.5	M6	1x4	2954	7295	68
OFI03205-4	32	5	3.175	46	72	12	87	58	52	6.5	11	6.5	M8	1x4	1922	6343	72
OFI03210-4		10	6.35	54	88	15	145	70	62	9	14	8.5	M8	1x4	4805	12208	83
OFI04005-4	40	5	3.175	56	90	15	90	72	64	9	14	8.5	M8	1x4	2110	7988	84
OFI04010-4		10	6.35	62	104	18	148	82	70	11	17.5	11	M8	1x4	5399	15500	99
OFI05010-4	50	10	6.35	72	114	18	148	92	82	11	17.5	11	M8	1x4	6004	19614	115
OFI06310-4	63	10	6.35	85	131	22	153	107	95	14	20	13	M8	1x4	6719	25358	135
OFI08010-4	80	10	6.35	105	150	22	153	127	115	14	20	13	M8	1x4	7346	31953	156
DFI01604-4	16	4	2.381	30	49	10	80	39	34	4.5	8	4.5	M6	1x4	973	2406	44
DFI02004-4	20	4	2.381	34	57	11	80	45	40	5.5	9.5	5.5	M6	1x4	1066	2987	51
DFI02504-4	25	4	2.381	40	63	11	80	51	46	5.5	9.5	5.5	M6	1x4	1180	3795	60
DFI0255T-4		5.08	3.175	40	63	11	101	51	46	5.5	9.5	5.5	M8	1x4	1724	4094	62
DFI03204-4	32	4	2.381	46	72	12	80	58	52	6.5	11	6.5	M6	1x4	1296	4838	69
DFI0325T-4		5.08	3.175	46	72	12	102	58	52	6.5	11	6.5	M8	1x4	1922	6343	72

DFM Series Specifications (Design for Milling)

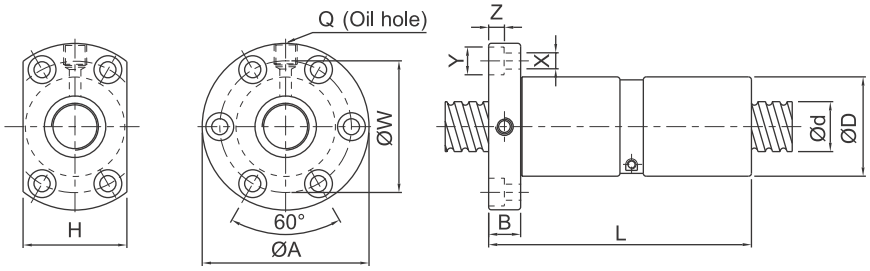

Unit：mm

	Model No.	d	l	Da	Dimension											Load Rating		K kgf／μm
					D	A	B	L	W	H	X	Y	Z	Q	n	Ca (kgf)	Coa (kgf)	
☆	DFM03205-4	32	5	3.175	48	74	12	102	60	60	6.5	11	6.5	M8	1x4	1922	6343	73
☆	DFM0325T-4		5.08	3.175	48	74	12	104	60	60	6.5	11	6.5	M8	1x4	1922	6343	73

Note : For double ball screw nut order, please contact ***TBIMOTION*** in advance.
※☆Left helix available

بلبرینگ اسکوئی

(اسکو صنعت تاوریژ)

OBC
Oskoyi Ballbearing Company

SFV Series Specifications

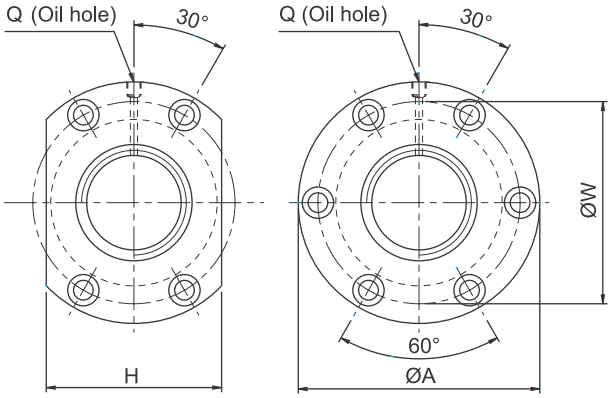

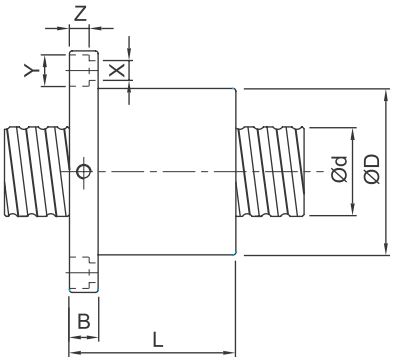

Unit: mm

Model No.	d	l	Da	Dimension											Load Rating		K kgf/μm
				D	A	B	L	W	H	X	Y	Z	Q	n	Ca (kgf)	Coa (kgf)	
SFV01205-2.8	12	5	2.5	30	50	10	42	40	32	4.5	8	4.5	M6	2.8x1	661	1316	19
SFV01210-2.7		10	2.5	30	50	10	53	40	32	4.5	8	4.5	M6	2.7x1	623	1241	18
SFV01510-2.7	15	10	3.175	34	58	10	57	45	34	5.5	9.5	5.5	M6	2.7x1	972	2020	23
SFV01604-3.8	16	4	2.381	34	57	11	45	45	34	5.5	9.5	5.5	M6	3.8x1	931	2285	31
SFV01605-4.8		5	3.175	40	63	11	58	51	42	5.5	9.5	5.5	M6	4.8x1	1614	3662	40
SFV01610-2.7		10	3.175	40	63	11	56	51	42	5.5	9.5	5.5	M6	2.7x1	1008	2161	24
SFV02004-4.8	20	4	2.381	40	60	10	50	50	40	4.5	8	4	M6	4.8x1	1247	3584	45
SFV02005-4.8		5	3.175	44	67	11	57	55	52	5.5	9.5	5.5	M6	4.8x1	1814	4650	47
SFV02010-2.7		10	3.969	46	74	13	57	59	46	6.6	11	6.5	M6	2.7x1	1518	3398	30
SFV02020-1.8		20	3.175	46	74	13	70	59	46	6.6	11	6.5	M6	1.8x1	764	1758	19
SFV02505-4.8	25	5	3.175	50	73	11	55	61	52	5.5	9.5	5.5	M8	4.8x1	2017	5884	56
SFV02506-4.8		6	3.969	53	76	11	62	64	58	5.5	9.5	5.5	M6	4.8x1	2711	7268	58
SFV02508-4.8		8	4.762	56	85	13	70	71	64	6.5	11	6.5	M6	4.8x1	3466	8776	61
SFV02510-2.7		10	6.35	68	102	15	70	84	82	9	14	8.5	M8	2.7x1	3040	6547	37
SFV02525-1.8		25	3.175	50	73	13	83	61	52	5.5	9.5	5.5	M8	1.8x1	843	2199	22
SFV03204-4.8	32	4	2.381	54	81	12	50	67	64	6.6	11	6.5	M6	4.8x1	1517	5806	62
SFV03205-4.8		5	3.175	58	85	12	56	71	64	6.6	11	6.5	M8	4.8x1	2249	7612	66
SFV03206-4.8		6	3.969	62	89	12	60	75	68	6.6	11	6.5	M8	4.8x1	3079	9575	70
SFV03208-4.8		8	4.762	66	100	15	75	82	76	9	14	8.5	M8	4.8x1	3962	11547	74
SFV03210-4.8		10	6.35	74	108	15	96	90	82	9	14	9	M8	4.8x1	5620	14649	76
SFV03220-2.7		20	6.35	74	108	16	100	90	82	9	14	8.5	M8	2.7x1	3509	8644	46
SFV04005-4.8	40	5	3.175	67	101	15	59	83	72	9	14	8.5	M8	4.8x1	2468	9586	76
SFV04010-4.8		10	6.35	82	124	18	100	102	94	11	17.5	11	M8	4.8x1	6316	18600	90
SFV04020-2.7		20	6.35	82	124	18	100	102	90	11	17.5	11	M8	2.7x1	3935	10893	56
SFV05005-4.8	50	5	3.175	80	114	15	60	96	82	9	14	8.5	M8	4.8x1	2698	12053	87
SFV05010-4.8		10	6.35	93	135	16	93	113	98	11	17.5	11	M8	4.8x1	7023	23537	106
SFV05020-2.7		20	9.525	105	152	28	121	128	110	14	20	13	M8	2.7x1	7336	19700	68
SFV06310-4.8	63	10	6.35	108	154	22	105	130	110	14	20	13	M8	4.8x1	7860	30430	126
SFV06320-2.7		20	9.525	122	180	28	120	150	130	18	26	17.5	M8	2.7x1	8162	24741	80
SFV08010-4.8	80	10	6.35	130	176	22	105	152	132	14	20	13	M8	4.8x1	8593	38344	145
SFV08020-4.8		20	9.525	143	204	28	180	172	148	18	26	18	M8	4.8x1	15103	57296	168
SFV08020-7.6		20	9.525	143	204	28	240	172	148	18	26	18	M8	3.8x2	22423	90719	260

تلفن : (021) 33913364 - 33951660

فکس : (021) 33985603

OFV／DFV Series Specifications

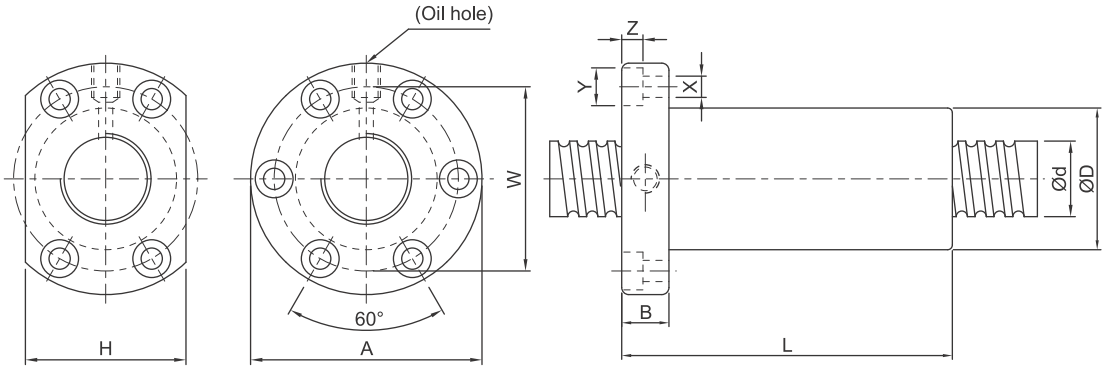

Unit : mm

Model No.	d	l	Da	Dimension											Load Rating		K kgf／μm
				D	A	B	L	W	H	X	Y	Z	Q	n	Ca (kgf)	Coa (kgf)	
OFV01605-4.8	16	5	3.175	40	63	11	100	51	42	5.5	9.5	5.5	M6	4.8x1	1614	3662	53
OFV02005-4.8	20	5	3.175	44	67	11	102.5	55	52	5.5	9.5	5.5	M6	4.8x1	1814	4650	63
OFV02505-4.8	25	5	3.175	50	73	11	96	61	52	5.5	9.5	5.5	M8	4.8x1	2017	5884	75
OFV03205-4.8	32	5	3.175	58	85	12	98	71	64	6.6	11	6.5	M8	4.8x1	2249	7612	90
OFV03210-4.8		10	6.35	74	108	15	166	90	82	9	14	9	M8	4.8x1	5620	14649	101
OFV04005-4.8	40	5	3.175	67	101	15	100	83	72	9	14	8.5	M8	4.8x1	2468	9586	105
OFV04010-4.8		10	6.35	82	124	18	174	102	94	11	17.5	11	M8	4.8x1	6316	18600	121
OFV05010-4.8	50	10	6.35	93	135	16	167	113	98	11	17.5	11	M8	4.8x1	7023	23537	144
OFV06310-4.8	63	10	6.35	108	154	22	177	130	110	14	20	13	M8	4.8x1	7860	30430	172
OFV08010-4.8	80	10	6.35	130	176	22	178	152	132	14	20	13	M8	4.8x1	8593	38344	201
DFV01510-2.7	15	10	3.175	34	58	10	107	45	34	5.5	9.5	5.5	M6	2.7x1	972	2020	30
DFV01604-3.8	16	4	2.381	34	57	11	89	45	34	5.5	9.5	5.5	M6	3.8x1	931	2285	42
DFV02004-4.8	20	4	2.381	40	60	10	94	50	40	4.5	8	4	M6	4.8x1	1247	3584	61
DFV02010-2.7		10	3.969	46	74	13	117	59	46	6.6	11	6.5	M6	2.7x1	1518	3398	40
DFV02506-4.8	25	6	3.969	53	76	11	116	64	58	5.5	9.5	5.5	M6	4.8x1	2711	7268	78
DFV02508-4.8		8	4.762	56	85	13	134	71	64	6.5	11	6.5	M6	4.8x1	3466	8776	82
DFV02510-2.7		10	6.35	68	102	15	130	84	82	9	14	8.5	M8	2.7x1	3040	6547	49
DFV03204-4.8	32	4	2.381	54	81	12	94	67	64	6.6	11	6.5	M6	4.8x1	1517	5806	85
DFV03206-4.8		6	3.969	62	89	12	114	75	68	6.6	11	6.5	M8	4.8x1	3079	9575	95
DFV03208-4.8		8	4.762	66	100	15	139	82	76	9	14	8.5	M8	4.8x1	3962	11547	100
DFV03220-2.7		20	6.35	74	108	16	200	90	82	9	14	8.5	M8	2.7x1	3509	8644	61
DFV04020-2.7	40	20	6.35	82	124	18	200	102	90	11	17.5	11	M8	2.7x1	3935	10893	74
DFV05005-4.8	50	5	3.175	80	114	15	115	96	82	9	14	8.5	M8	4.8x1	2698	12053	122
DFV05020-2.7		20	9.525	105	152	28	221	128	110	14	20	13	M8	2.7x1	7336	19700	90
DFV06320-2.7	63	20	9.525	122	180	28	220	150	130	18	26	17.5	M8	2.7x1	8162	24741	107
DFV08020-4.8	80	20	9.525	143	204	28	340	172	148	18	26	18	M8	4.8x1	15103	57296	226
DFV08020-7.6		20	9.525	143	204	28	460	172	148	18	26	18	M8	3.8x2	22423	90719	351

Note : For double ball screw nut order, please contact ***TBIMOTION*** in advance

بلبرینگ اسکوئی

(اسکو صنعت تاوریژ)

OBC
Oskoyi Ballbearing Company

SFY Series Specifications

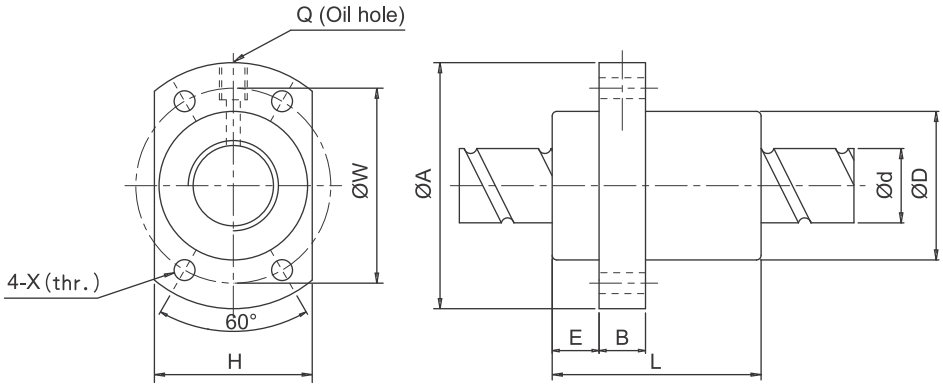

Unit: mm

Large Lead Model No.	d	l	Da	Dimension										Load Rating		K kgf/μm
				D	A	E	B	L	W	H	X	Q	n	Ca (kgf)	Coa (kgf)	
SFY01616-3.6	16	16	2.778	32	53	10.1	10	45	42	34	4.5	M6	1.8x2	1073	2551	31
SFY01616-5.6		16	2.778	32	53	10.1	10	61	42	34	4.5	M6	2.8x2	1568	3968	47
SFY02020-3.6	20	20	3.175	39	62	13	10	52	50	41	5.5	M6	1.8x2	1387	3515	37
SFY02020-5.6		20	3.175	39	62	13	10	72	50	41	5.5	M6	2.8x2	2029	5468	56
SFY02525-3.6	25	25	3.969	47	74	15	12	64	60	49	6.6	M6	1.8x2	2074	5494	45
SFY02525-5.6		25	3.969	47	74	15	12	89	60	49	6.6	M6	2.8x2	3032	8546	69
SFY03232-3.6	32	32	4.762	58	92	17	12	78	74	60	9	M6	1.8x2	3021	8690	58
SFY03232-5.6		32	4.762	58	92	17	12	110	74	60	9	M6	2.8x2	4417	13517	88
SFY04040-3.6	40	40	6.35	73	114	19.5	15	99	93	75	11	M6	1.8x2	4831	14062	70
SFY04040-5.6		40	6.35	73	114	19.5	15	139	93	75	11	M6	2.8x2	7065	21874	106
SFY05050-3.6	50	50	7.938	90	135	21.5	20	117	112	92	14	M6	1.8x2	7220	21974	86
SFY05050-5.6		50	7.938	90	135	21.5	20	167	112	92	14	M6	2.8x2	10558	34182	131

Twin Lead Model No.	d	l	Da	Dimension										Ca (kgf)	Coa (kgf)	K kgf/μm
				D	A	E	B	L	W	H	X	Q	n			
SFY01632-1.6	16	32	2.778	32	53	10.1	10	42.5	42	34	4.5	M6	0.8x2	493	1116	11
SFY01632-3.6		32	2.778	32	53	10.1	10	74.5	42	34	4.5	M6	1.8x2	989	2511	23
SFY02040-1.6	20	40	3.175	39	62	13	10	48	50	41	5.5	M6	0.8x2	653	1597	15
SFY02040-3.6		40	3.175	39	62	13	10	88	50	41	5.5	M6	1.8x2	1311	3592	30
SFY02550-1.6	25	50	3.969	47	74	15	12	58	60	49	6.6	M6	0.8x2	976	2495	19
SFY02550-3.6		50	3.969	47	74	15	12	108	60	49	6.6	M6	1.8x2	1960	5614	32
SFY03264-1.6	32	64	4.762	58	92	17	12	71	74	60	9	M6	0.8x2	1374	3571	22
SFY03264-3.6		64	4.762	58	92	17	12	135	74	60	9	M6	1.8x2	2759	8441	46
SFY04080-1.6	40	80	6.35	73	114	19.5	15	90	93	75	11	M6	0.8x2	2273	6387	29
SFY04080-3.6		80	6.35	73	114	19.5	15	170	93	75	11	M6	1.8x2	4566	14370	50
SFY050100-1.6	50	100	7.938	90	135	21.5	20	111	112	92	14	M6	0.8x2	3398	9980	35
SFY050100-3.6		100	7.938	90	135	21.5	20	211	112	92	14	M6	1.8x2	6824	22455	72

تلفن : (021) 33913364 - 33951660

فکس : (021) 33985603

DFS (DIN 69051 FORM B) Series Specifications

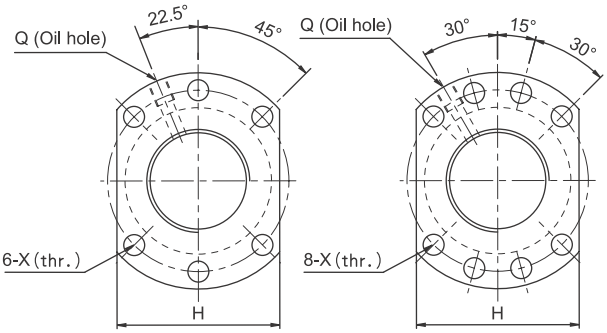

d≦32 d≧40

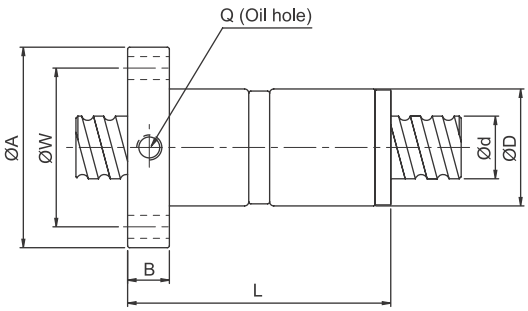

Unit : mm

Model No.	d	l	Da	Dimension									Load Rating		K kgf／μm
				D	A	B	L	W	H	X	Q	n	Ca (kgf)	Coa (kgf)	
DFS01605-3.8	15	5	2.778	28	48	10	73	38	40	5.5	M6	3.8x1	1112	2507	41
DFS01610-2.8		10	2.778	28	48	10	97	38	40	5.5	M6	2.8x1	839	1821	31
DFS02005-3.8	20	5	3.175	36	58	10	75	47	44	6.6	M6	3.8x1	1484	3681	50
DFS02010-3.8		10	3.175	36	58	10	120	47	44	6.6	M6	3.8x1	1516	3833	53
DFS02505-3.8	25	5	3.175	40	62	10	75	51	48	6.6	M6	3.8x1	1650	4658	59
DFS02510-3.8		10	3.175	40	62	12	122	51	48	6.6	M6	3.8x1	1638	4633	61
DFS03205-3.8	32	5	3.175	50	80	12	82	65	62	9	M6	3.8x1	1839	6026	71
DFS03210-3.8	31	10	3.969	50	80	13	122	65	62	9	M6	3.8x1	2460	7255	75
DFS03220-2.8		20	3.969	50	80	12	160	65	62	9	M6	2.8x1	1907	5482	58
DFS04005-3.8	40	5	3.175	63	93	15	85	78	70	9	M8	3.8x1	2018	7589	83
DFS04010-3.8	38	10	6.35	63	93	14	123	78	70	9	M8	3.8x1	5035	13943	91
DFS04020-2.8		20	6.35	63	93	14	162	78	70	9	M8	2.8x1	3959	10715	73
DFS05005-3.8	50	5	3.175	75	110	15	85	93	85	11	M8	3.8x1	2207	9542	96
DFS05010-3.8	48	10	6.35	75	110	18	138	93	85	11	M8	3.8x1	5638	17852	109
DFS05020-3.8		20	6.35	75	110	18	218	93	85	11	M8	3.8x1	5749	18485	116

Note : For double ball screw nut order, please contact ***TBIMOTION*** in advance.

بلبرینگ اسکوئی

(اسکو صنعت تاوریژ)

OBC
Oskoyi Ballbearing Company

SCNI／SCI Series Specifications

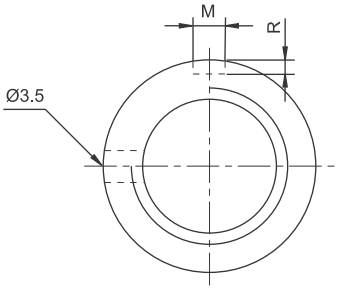

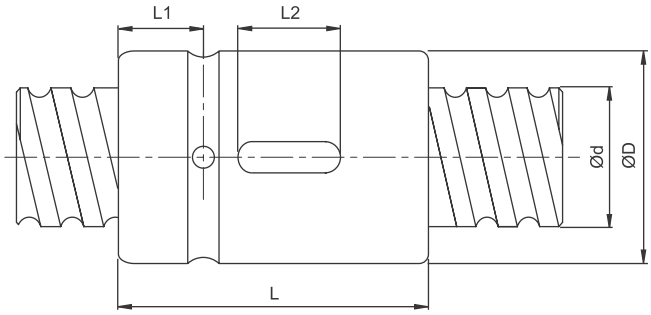

Unit : mm

Model No.	d	l	Da	Dimension							Load Rating		K kgf／μm
				D	L	L1	L2	M	R	n	Ca (kgf)	Coa (kgf)	
SCNI01605-4	16	5	3.175	30	45	9	20	5	3	1x4	1380	3052	33
SCNI02005-4	20	5	3.175	34	45	9	20	5	3	1x4	1551	3875	39
SCNI02505-4	25	5	3.175	40	45	9	20	5	3	1x4	1724	4904	45
SCNI02510-4		10	4.762	46	85	13	30	5	3	1x4	2954	7295	51
SCNI03205-4	32	5	3.175	46	45	9	20	5	3	1x4	1922	6343	52
SCNI03210-4		10	6.35	54	85	13	30	5	3	1x4	4805	12208	62
SCNI04005-4	40	5	3.175	56	45	9	20	5	3	1x4	2110	7988	59
SCNI04010-4		10	6.35	62	85	13	30	5	3	1x4	5399	15500	72
SCNI05010-4	50	10	6.35	72	85	13	30	5	3	1x4	6004	19614	83
SCNI06310-4	63	10	6.35	85	85	13	30	6	3.5	1x4	6719	25358	95
SCNI08010-4	80	10	6.35	105	85	13	30	8	4.5	1x4	7346	31953	109
SCI01604-4	16	4	2.381	30	40	9	15	3	1.5	1x4	973	2406	32
SCI02004-4	20	4	2.381	34	40	9	15	3	1.5	1x4	1066	2987	37
SCI02504-4	25	4	2.381	40	40	9	15	3	1.5	1x4	1180	3795	43
SCI03204-4	32	4	2.381	46	40	9	15	3	1.5	1x4	1296	4838	49

تلفن : (021) 33913364 - 33951660

فکس : (021) 33985603

SFK Series Specifications

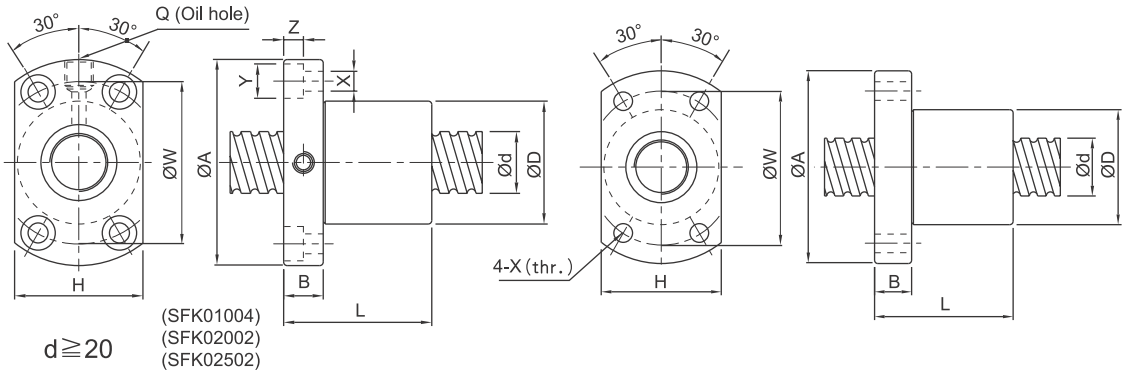

Unit : mm

	Model No.	d	l	Da	Dimension											Ca (kgf)	Coa (kgf)	K kgf/μm
					D	A	B	L	W	H	X	Y	Z	Q	n			
	SFK00401	4	1	0.8	10	20	3	12	15	14	2.9	–	–	–	1x2	64	97	5
	SFK00601	6	1	0.8	12	24	3.5	15	18	16	3.4	–	–	–	1x3	111	224	9
☆	SFK00801	8	1	0.8	14	27	4	16	21	18	3.4	–	–	–	1x4	161	403	14
☆	SFK00802		2	1.2	14	27	4	16	21	18	3.4	–	–	–	1x3	222	458	13
	SFK0082.5		2.5	1.2	16	29	4	26	23	20	3.4	–	–	–	1x3	221	457	13
☆	SFK01002	10	2	1.2	18	35	5	28	27	22	4.5	–	–	–	1x3	243	569	15
	SFK01004		4	2	26	46	10	34	36	28	4.5	8	4.5	M6	1x3	468	905	17
☆	SFK01202	12	2	1.2	20	37	5	28	29	24	4.5	–	–	–	1x4	334	906	22
☆	SFK01402	14	2	1.2	21	40	6	23	31	26	5.5	–	–	–	1x4	354	1053	24
☆	SFK01602	16	2	1.2	25	43	10	40	35	29	5.5	–	–	M6	1x4	373	1200	26
	SFK02002	20	2	1.2	50	80	15	55	65	68	6.5	10.5	6	M6	1x6	581	2284	48
	SFK02502	25	2	1.2	50	80	13	43	65	68	6.5	10.5	6	M6	1x5	540	2381	46

※☆Left helix available

Unit : mm

Model No.	d	l	Da	Dimension											Ca (kgf)	Coa (kgf)	K kgf/μm
				D	A	B	L	W	H	X	Y	Z	Q	n			
XSUR01204T3D-02	12	4	2.5	24	40	6	28	32	25	3.5	–	–	–	1x3	454	722	–
XSUR01205T3D-00		5	2.5	22	37	8	39	29	24	4.5	–	–	–	1x3	675	1316	17

بلبرینگ اسکوئی

(اسکو صنعت تاوریژ)

OBC
Oskoyi Ballbearing Company

BSH Series Specifications

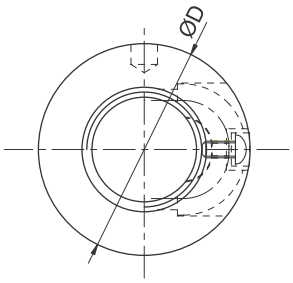

d≦12
(External circulation type)

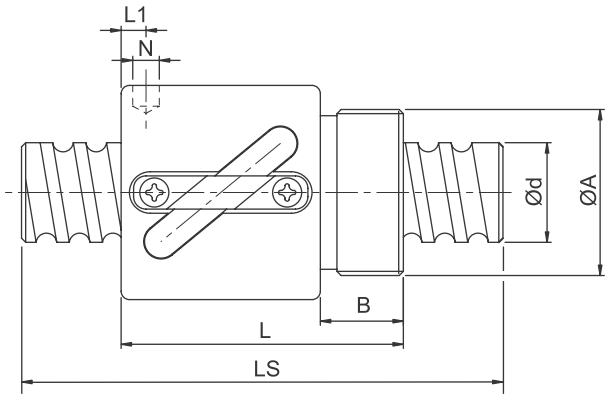

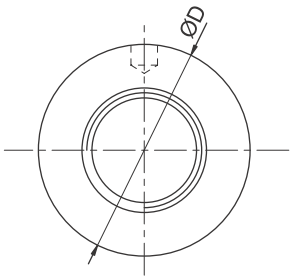

d≧14
(Internal circulation type)

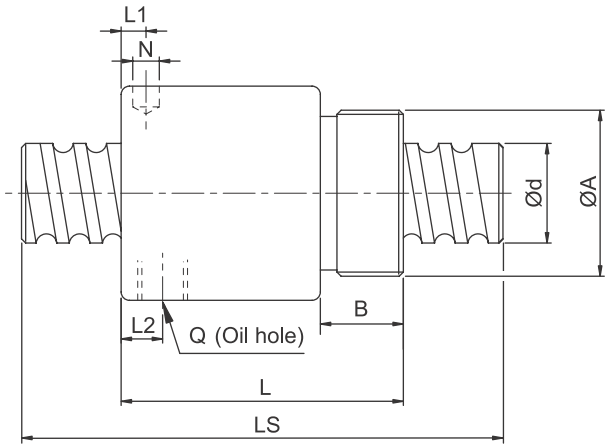

Unit : mm

Model No.	d	l	Da	Dimension									Ca (kgf)	Coa (kgf)	K kgf/μm
				D	A	B	L	L1	N	L2	Q	n			
BSHR0082.5-2.5	8	2.5	1.2	17.5	M15x1P	7.5	23.5	10	3	–	–	2.5x1	189	381	11
BSHR01002-3.5	10	2	1.2	19.5	M17x1P	7.5	22	3	3.2	–	–	3.5x1	277	664	17
BSHR01004-2.5		4	2	25	M20x1P	10	34	3	3	–	–	2.5x1	400	754	14
BSHR01204-3.5	12	4	2.5	25.5	M20x1P	10	34	13	3	–	–	3.5x1	804	1649	23
BSHR01205-3.5		5	2.5	25.5	M20x1P	10	39	16.25	3	–	–	3.5x1	801	1644	24
BSHR01404-3	14	4	2.5	32.1	M25x1.5P	10	35	11	3	–	–	1x3	748	1609	26
BSHR01604-3	16	4	2.381	29	M22x1.5P	8	32	4	3.2	–	–	1x3	759	1804	24
BSHR01605-3		5	3.175	32.5	M26x1.5P	12	42	19.25	3	–	–	1x3	1077	2289	25
BSHR01610-2		10	3.175	32	M26x1.5P	12	50	3	4	3	M4	1x2	675	1316	14
BSHR02005-3	20	5	3.175	38	M35x1.5P	15	45	20.3	3	–	–	1x3	1211	2906	30
BSHR02505-4	25	5	3.175	43	M40x1.5P	19	69	32.11	3	8	M6	1x4	1724	4904	37
BSHR02510-4		10	4.762	43	M40x1.5P	19	84	8	6	8	M6	1x4	2954	7295	41

※Standard ball nut from Ø8~Ø16 is assembled without wiper.

تلفن : (021) 33913364 - 33951660
فکس : (021) 33985603

XSVR01210-01 Series Specifications (Finish Shaft Ends)

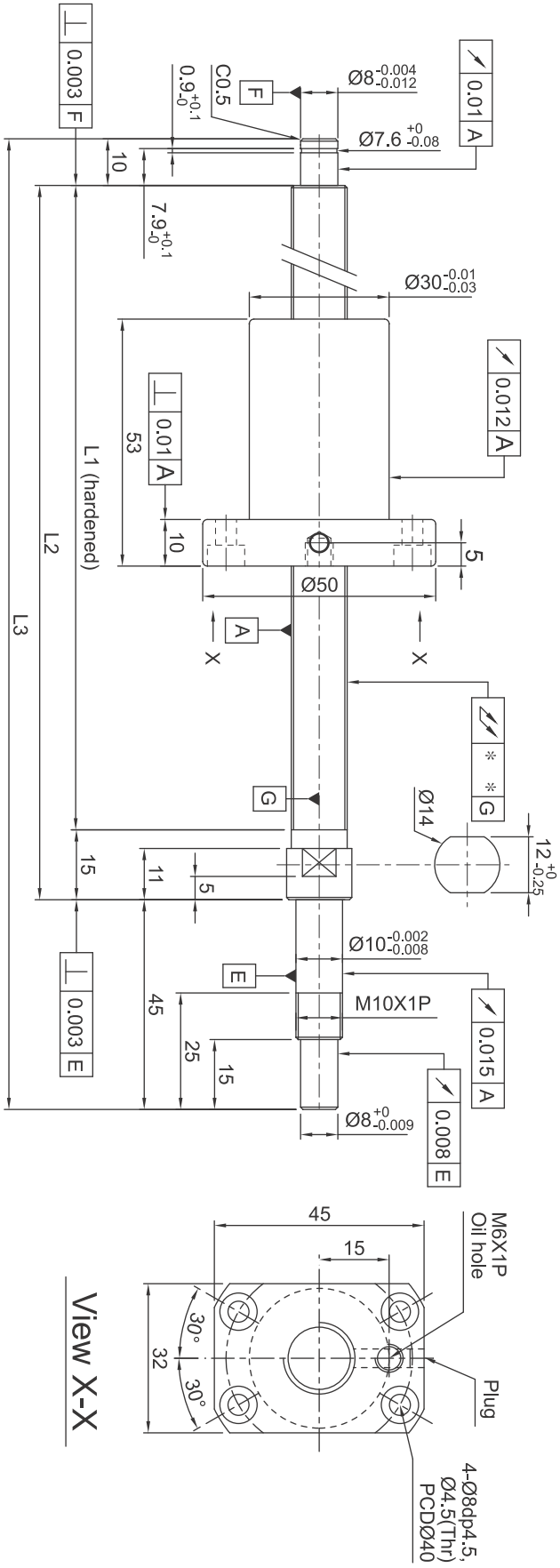

BCD	12.85
Ball Dia (mm)	2.5
Lead (mm)	10
No.of Turns	2.7x1
Lead Angle	13.91°
Threading Direction	R
Spring Force (kg)	0.1~0.2
Preload (kgf)	25
Dynamic Load Rating Ca (kgf)	623
Static Load Rating Coa (kgf)	1241
Accuracy Grade	0.018

Unit: mm

Travel Length (mm)	Model No.	Shaft Length(mm)			Slant of Axle Center
		L1	L2	L3	
100	XSVR01210B1DGC5-230-P1	160	175	230	0.035
150	XSVR01210B1DGC5-280-P1	210	225	280	0.035
250	XSVR01210B1DGC5-380-P1	310	325	380	0.050
350	XSVR01210B1DGC5-480-P1	410	425	480	0.060
450	XSVR01210B1DGC5-580-P1	510	525	580	0.075

XSVR01510-00 Series Specifications
(Finish Shaft Ends)

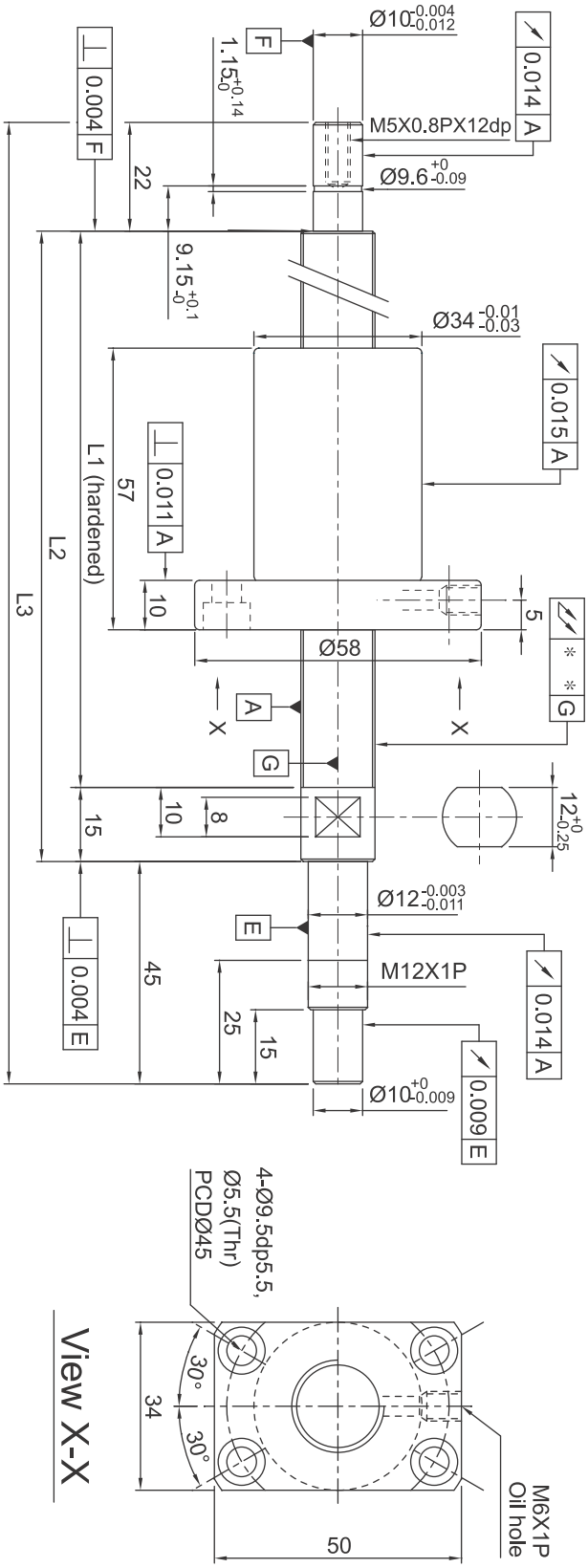

BCD	15.5
Ball Dia (mm)	3.175
Lead (mm)	10
No.of Turns	2.7x1
Lead Angle	11.6°
Threading Direction	R
Spring Force (kg)	0.1~0.3
Preload (kgf)	38
Dynamic Load Rating Ca (kgf)	933
Static Load Rating Coa (kgf)	1885
Accuracy Grade	0.018

Unit : mm

Travel Length (mm)	Model No.	Shaft Length(mm)			Slant of Axle Center
		L1	L2	L3	
100	XSVR01510B1DGC5-271-P1	189	204	271	0.025
150	XSVR01510B1DGC5-321-P1	239	254	321	0.035
200	XSVR01510B1DGC5-371-P1	289	304	371	0.035
250	XSVR01510B1DGC5-421-P1	339	354	421	0.040
300	XSVR01510B1DGC5-471-P1	389	404	471	0.040
350	XSVR01510B1DGC5-521-P1	439	454	521	0.050
400	XSVR01510B1DGC5-571-P1	489	504	571	0.050
450	XSVR01510B1DGC5-621-P1	539	554	621	0.050
500	XSVR01510B1DGC5-671-P1	589	604	671	0.065
550	XSVR01510B1DGC5-721-P1	639	654	721	0.065
600	XSVR01510B1DGC5-771-P1	689	704	771	0.065
700	XSVR01510B1DGC5-871-P1	789	804	871	0.085
800	XSVR01510B1DGC5-971-P1	889	904	971	0.085

XSVR01520-01 Series Specifications (Finish Shaft Ends)

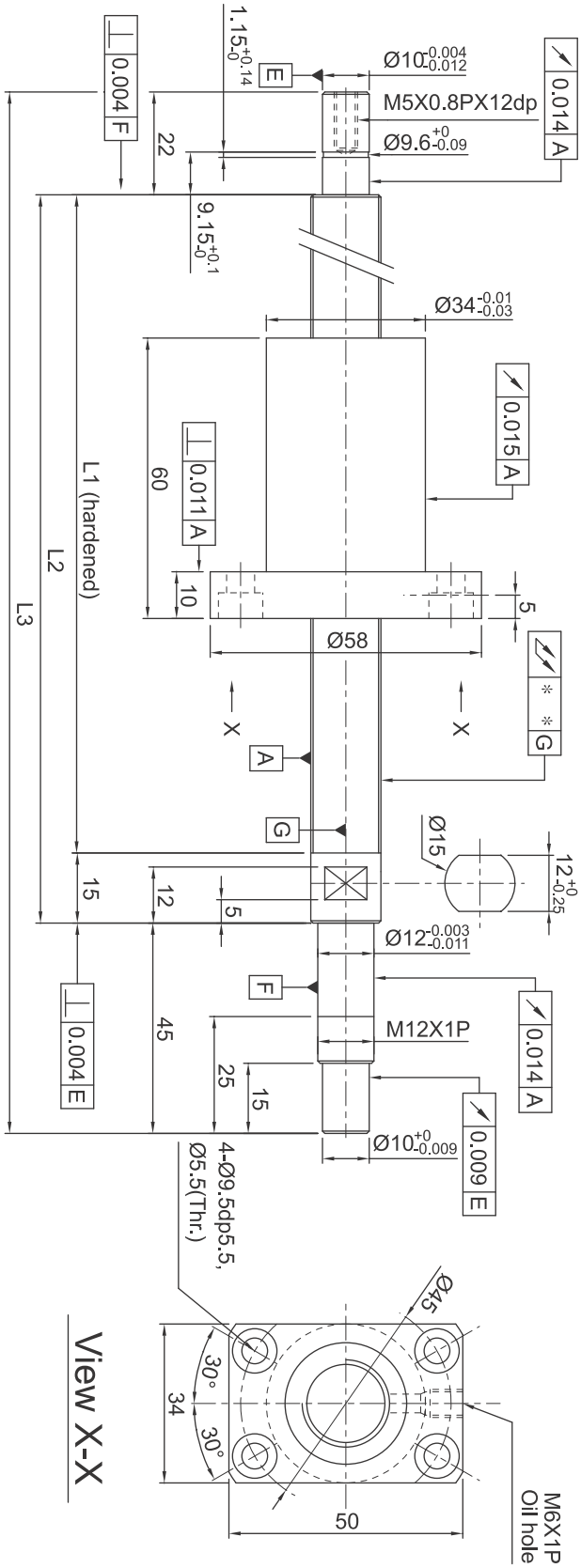

BCD	15.5
Ball Dia (mm)	3.175
Lead (mm)	20
No.of Turns	1.8x1
Lead Angle	22.33°
Threading Direction	R
Spring Force (kg)	0.1~0.3
Preload (kgf)	38
Dynamic Load Rating Ca (kgf)	638
Static Load Rating Coa (kgf)	1266
Accuracy Grade	0.018

Unit : mm

Travel Length (mm)	Model No.	Shaft Length(mm)			Slant of Axle Center
		L1	L2	L3	
100	XSVR01520A1DGC5-271-P1	189	204	271	0.025
150	XSVR01520A1DGC5-321-P1	239	254	321	0.035
200	XSVR01520A1DGC5-371-P1	289	304	371	0.035
250	XSVR01520A1DGC5-421-P1	339	354	421	0.040
300	XSVR01520A1DGC5-471-P1	389	404	471	0.040
350	XSVR01520A1DGC5-521-P1	439	454	521	0.050
400	XSVR01520A1DGC5-571-P1	489	504	571	0.050
450	XSVR01520A1DGC5-621-P1	539	554	621	0.050
500	XSVR01520A1DGC5-671-P1	589	604	671	0.065
550	XSVR01520A1DGC5-721-P1	639	654	721	0.065
600	XSVR01520A1DGC5-771-P1	689	704	771	0.065
700	XSVR01520A1DGC5-871-P1	789	804	871	0.085
800	XSVR01520A1DGC5-971-P1	889	904	971	0.085

XSVR02010-00 Series Specifications
(Finish Shaft Ends)

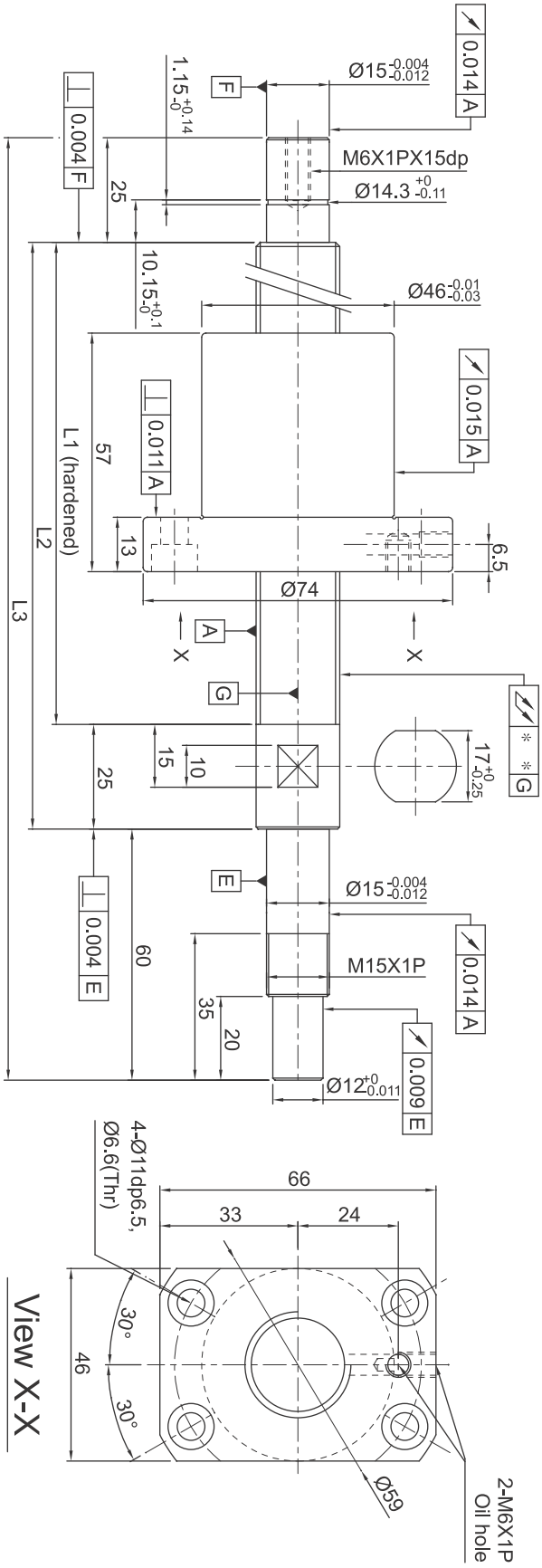

BCD	21.35
Ball Dia (mm)	3.969
Lead (mm)	10
No.of Turns	2.7x1
Lead Angle	8.48°
Threading Direction	R
Spring Force (kg)	0.1~0.3
Preload (kgf)	43
Dynamic Load Rating Ca (kgf)	1518
Static Load Rating Coa (kgf)	3398
Accuracy Grade	0.018

Unit: mm

Travel Length (mm)	Model No.	Shaft Length(mm)			Slant of Axle Center
		L1	L2	L3	
200	XSVR02010B1DGC5-399-P1	289	314	399	0.035
300	XSVR02010B1DGC5-499-P1	389	414	499	0.040
400	XSVR02010B1DGC5-599-P1	489	514	599	0.050
500	XSVR02010B1DGC5-699-P1	589	614	699	0.065
600	XSVR02010B1DGC5-799-P1	689	714	799	0.065
700	XSVR02010B1DGC5-899-P1	789	814	899	0.085
800	XSVR02010B1DGC5-999-P1	889	914	999	0.085
900	XSVR02010B1DGC5-1099-P1	989	1014	1099	0.110
1000	XSVR02010B1DGC5-1199-P1	1089	1114	1199	0.110

تلفن : (021) 33913364 - 33951660

فکس : (021) 33985603

XSVR02020-00 Series Specifications
(Finish Shaft Ends)

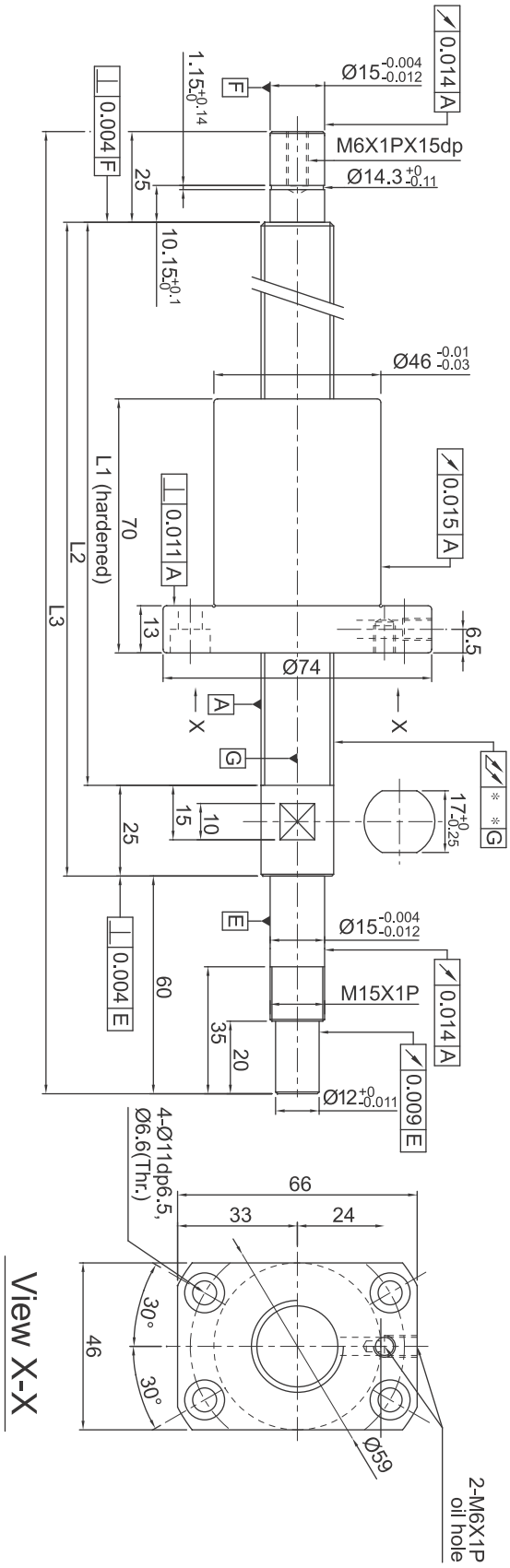

BCD	20.75
Ball Dia (mm)	3.175
Lead (mm)	20
No.of Turns	1.8x1
Lead Angle	17.05°
Threading Direction	R
Spring Force (kg)	0.1~0.3
Preload (kgf)	31
Dynamic Load Rating Ca (kgf)	764
Static Load Rating Coa (kgf)	1758
Accuracy Grade	0.018

Unit : mm

Travel Length (mm)	Model No.	Shaft Length(mm)			Slant of Axle Center
		L1	L2	L3	
200	XSVR02020A1DGC5-399-P1	289	314	399	0.035
300	XSVR02020A1DGC5-499-P1	389	414	499	0.040
400	XSVR02020A1DGC5-599-P1	489	514	599	0.050
500	XSVR02020A1DGC5-699-P1	589	614	699	0.065
600	XSVR02020A1DGC5-799-P1	689	714	799	0.065
700	XSVR02020A1DGC5-899-P1	789	814	899	0.085
800	XSVR02020A1DGC5-999-P1	889	914	999	0.085
900	XSVR02020A1DGC5-1099-P1	989	1014	1099	0.110
1000	XSVR02020A1DGC5-1199-P1	1089	1114	1199	0.110

2-3 Rolled Ball Screw

2-3-1 Rolled Screws

Rolled screws are made through thread roller. Generally rolled screw has a smoother operation while lowering friction and backlash. Therefore, it gradually replaced the traditional ACME screws and trapezoidal screws. Moreover, rolled screws can eliminate axial play by preloading nut with a cost effective pricing compare to ground screw.

2-3-2 The Features of *TBIMOTION* Rolled Ball Screw

(1) Lead Accuracy Up to Grade C5

C7 and C10 Screws have been Standardized. C5 on request.

(2) Precision Ground Ball Nut

TBIMOTION High Precision Ball Nut are interchangeable between ground and rolled screws.

(3) Maximize Interchangeability

TBIMOTION Ball screw and ball nuts can be shipped separated ensure shortest delivery time. The ball nuts are standardized with P0 preloaded, preload value can be adjusted through reballing.

2-3-3 Nominal Model Code of Rolled Ball Screws

Nominal Model Code of Shaft

SC R 025 05 F C7 - 1000 + N3

Type of Screw Shaft
SC : standard SS : For SFS, DFS Only

Threading Direction
R : Right L : Left

Nominal Diameter
Unit : mm

Lead
Unit : mm

Product Code
F : Rolled

Accuracy Grade
C5, C7, C10

Overall Length of Shaft
Unit : mm

Shaft Surface Treatment
□ : Standard B1 : Black Oxidation N1 : Hard Chrome Plating P : Phosphating N3 : Nickel Plating
N4 : Raydent N5 : Balck Chrome Plating

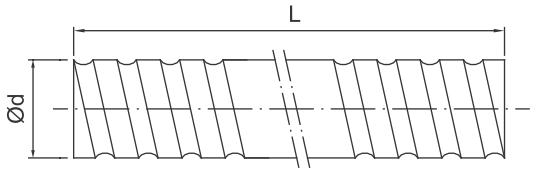

Fig 2.1.1 Screw Shaft Nominial Diameter

Table 2.1.1 Ground Ball Screw Specifications Ø4~32

Unit : mm

Model No.			Accuracy Grade	Threading Direction	Number of Grooves	Standard Code of Shaft	Type of Nut
Ød	l	Da		R : Right L : Left			
4	1	0.8	C7, C5, C3	R	1	SCR00401	K
6	1	0.8	C7, C5, C3	R	1	SCR00601	K
8	1	0.8	C7, C5, C3	R／L	1	SCR00801	K
	2	1.2	C7, C5, C3	R／L	1	SCR00802	K
	2.5	1.2	C7, C5, C3	R	1	SCR0082.5	K, BSH
10	2	1.2	C7, C5, C3	R／L	1	SCR01002	K, BSH
	4	2	C7, C5, C3	R	1	SCR01004	K, BSH
12	2	1.2	C7, C5, C3	R／L	1	SCR01202	K
	4	2.5	C7, C5, C3	R	1	SCR01204	U, BSH
	5	2.5	C7, C5, C3	R	1	SCR01205-A	V, U, BSH, S, H
	10	2.5	C7, C5, C3	R	2	SCR01210-B	V
14	2	1.2	C7, C5, C3	R／L	1	SCR01402	K
	4	2.5	C7, C5, C3	R	1	SCR01404	BSH
16	2	1.2	C7, C5, C3	R／L	1	SCR01602	K
	4	2.381	C7, C5, C3	R	1	SCR01604(N)	V, I, U, BSH
	5	3.175	C7, C5, C3	R／L	1	SCR01605	V, I, U, BSH
	10	3.175	C7, C5, C3	R／L	2	SCR01610	V, I, U, BSH
	16	2.778	C7, C5, C3	R	2	SCR01616	Y
	32	2.778	C7, C5, C3	R	2	SCR01632	Y
20	4	2.381	C7, C5, C3	R	1	SCR02004(N)	V, I, U
	5	3.175	C7, C5, C3	R／L	1	SCR02005	V, I, U, BSH, S, H
	10	3.969	C7, C5, C3	R	1	SCR02010	V, S, H
	20	3.175	C7, C5, C3	R	2	SCR02020	V, Y, S, H
	40	3.175	C7, C5, C3	R	2	SCR02040	Y
25	4	2.381	C7, C5, C3	R	1	SCR02504(N)	I, U
	5	3.175	C7, C5, C3	R／L	1	SCR02505	V, I, U, BSH, S, H
	6	3.969	C7, C5, C3	R	1	SCR02506	V, U
	8	4.762	C7, C5, C3	R	1	SCR02508	V, U
	10	4.762	C7, C5, C3	R	1	SCR02510-A	I, U, BSH
	10	6.35	C7, C5, C3	R	1	SCR02510-B	V
	25	3.969	C7, C5, C3	R	2	SCR02525	V, Y
	50	3.969	C7, C5, C3	R	2	SCR02550	Y
32	4	2.381	C7, C5, C3	R	1	SCR03204(N)	V, I, U
	5	3.175	C7, C5, C3	R／L	1	SCR03205	V, I, U, M, S, H
	6	3.969	C7, C5, C3	R	1	SCR03206	V, U
	8	4.762	C7, C5, C3	R	1	SCR03208	V, U
	10	6.35	C7, C5, C3	R／L	1	SCR03210	V, I, U
	20	6.35	C7, C5, C3	R	1	SCR03220	V
	32	4.762	C7, C5, C3	R	2	SCR03232	Y
	64	4.762	C7, C5, C3	R	2	SCR03264	Y

Table 2.1.2 Standard Specifications Ø4~80

Unit : mm

Model No.			Accuracy Grade	Threading Direction	Starts	Standard Code of Shaft	Type of Nut
Ød	l	Da		R／L			
40	5	3.175	C7, C5, C3	R／L	1	SCR04005	V, I, U, S, H
	6	3.969	C7, C5, C3	R	1	SCR04006	V, U
	8	4.762	C7, C5, C3	R	1	SCR04008	V, U
	10	6.35	C7, C5, C3	R／L	1	SCR04010	V, I, U
	20	6.35	C7, C5, C3	R	2	SCR04020	V
	40	6.35	C7, C5, C3	R	2	SCR04040	Y
	80	6.35	C7, C5, C3	R	2	SCR04080	Y
50	5	3.175	C7, C5, C3	R	1	SCR05005	V, S, H
	10	6.35	C7, C5, C3	R／L	1	SCR05010	V, I, U
	20	9.525	C7, C5, C3	R	1	SCR05020	V
	50	7.938	C7, C5, C3	R	2	SCR05050	Y
	100	7.938	C7, C5, C3	R	2	SCR050100	Y
63	10	6.35	C7, C5, C3	R	1	SCR06310	V, I, U
	20	9.525	C7, C5, C3	R	1	SCR06320	V, U
80	10	6.35	C7, C5, C3	R	1	SCR08010	V, I, U
	20	9.525	C7, C5, C3	R	1	SCR08020	V, U

Table 2.1.3 S-type Specifications Ø12~50

Unit : mm

Model No.			Accuracy Grade	Threading Direction	Starts	Type-S Code of Shaft	Type of Nut
Ød	l	Da		R／L			
12	10	2.5	C7, C5, C3	R	1	SSR01210	S
16	5	2.778	C7, C5, C3	R	1	SSR01605	S, H
	10	2.778	C7, C5, C3	R	1	SSR01610	S, H
	16	2.778	C7, C5, C3	R	1	SSR01616	S, H
	20	2.778	C7, C5, C3	R	1	SSR01620	S
20	10	3.175	C7, C5, C3	R	1	SSR02010	S, H
25	10	3.175	C7, C5, C3	R	1	SSR02510	S, H
	25	3.175	C7, C5, C3	R	1	SSR02525	S, H
32	10	3.969	C7, C5, C3	R	1	SSR03210	S, H
	20	3.969	C7, C5, C3	R	1	SSR03220	S, H
	32	3.969	C7, C5, C3	R	1	SSR03232	S
40	10	6.35	C7, C5, C3	R	1	SSR04010	S, H
	20	6.35	C7, C5, C3	R	1	SSR04020	S
	40	6.35	C7, C5, C3	R	1	SSR04040	S
50	10	6.35	C7, C5, C3	R	1	SSR05010	S, H
	20	6.35	C7, C5, C3	R	1	SSR05020	S
	50	6.35	C7, C5, C3	R	1	SSR05050	S

※The information is for standard production, if other needs please contact ***TBIMOTION*** .

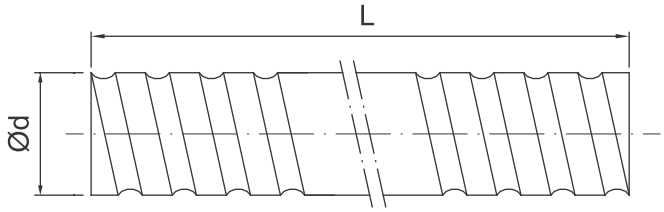

Fig 2.3.1 Screw Shaft Nominal Diameter

Table 2.3.1 Rolled Ball Screw Specifications Ø 6~32

Unit : mm

Model No.			Accuracy Grade	Threading Direction	Number of Grooves	Standard Code of Shaft	Type of Nut	Overall Length of Shaft
d	l	Da		R:Right L:Left				
6	1	0.8	C10, C7	R	1	SCR00601	K	1000
8	1	0.8	C10, C7, C5	R	1	SCR00801	K	1000
	2	1.2	C10, C7, C5	R	1	SCR00802	K	
	2.5	1.2	C10, C7, C5	R	1	SCR00825	K, BSH	
10	2	1.2	C10, C7, C5	R	1	SCR01002	K, BSH	3000
	4	2	C10, C7, C5	R	1	SCR01004	K, BSH	
12	2	1.2	C10, C7, C5	R	1	SCR01202	K	3000
	4	2.5	C10, C7, C5	R	1	SCR01204	NU, BSH	
	5	2.5	C10, C7, C5	R	1	SCR01205-A	V, NU, BSH, H	
	5	2.5	C10, C7, C5	R	1	SCR01205-B	K	
	10	2.5	C10, C7, C5	R	2	SCR01210-B	V	
	20	2.5	C10, C7	R	4	SCR01220	Y	
14	2	1.2	C10, C7, C5	R	1	SCR01402	K	1800
	4	2.5	C10, C7	R	1	SCR01404	BSH	3000
16	4	2.381	C10, C7, C5	R	1	SCR01604(N)	V, NI, NU, BSH	3000
	5	3.175	C10, C7, C5	R／L	1	SCR01605	V, NI, NU, BSH	
	10	3.175	C10, C7, C5	R	2	SCR01610	V, NI, NU, BSH	
	16	2.778	C10, C7, C5	R	4	SCR01616	Y	
	32	2.778	C10, C7	R	8	SCR01632	Y	
20	4	2.381	C10, C7, C5	R	1	SCR02004(N)	V, NI, NU	3000
	5	3.175	C10, C7, C5	R／L	1	SCR02005	V, NI, NU, BSH, H	
	20	3.175	C10, C7, C5	R	4	SCR02020	V, Y, H	
	40	3.175	C10, C7	R	8	SCR02040	Y	
25	4	2.381	C10, C7	R	1	SCR02504(N)	NI, NU	6000
	5	3.175	C10, C7, C5	R／L	1	SCR02505	V, NI, NU, BSH, H	
	10	4.762	C10, C7, C5	R	1	SCR02510-A	NI, NU, BSH	
	10	6.35	C10, C7, C5	R	1	SCR02510-B	V	
	25	3.969	C10, C7, C5	R	4	SCR02525	V, Y	
	50	3.969	C10, C7	R	8	SCR02550	Y	
32	4	2.381	C10, C7, C5	R	1	SCR03204(N)	V, NI, NU	6000
	5	3.175	C10, C7, C5	R／L	1	SCR03205	V, NI, NU, M, H	
	10	6.35	C10, C7, C5	R／L	1	SCR03210	V, NI, NU	
	32	4.762	C10, C7	R	4	SCR03232	Y	
	64	4.762	C10, C7	R	8	SCR03264	Y	

Table2.3.2 Standard Specifications Ø40~80

Unit : mm

Model No.			Accuracy Grade	Threading Direction	Number of Grooves	Standard Code of Shaft	Type of Nut	Overall Length of Shaft
d	l	Da		R : Right L : Left				
40	5	3.175	C10, C7, C5	R／L	1	SCR04005	V, NI, NU, H	6000
	10	6.35	C10, C7	R／L	1	SCR04010	V, NI, NU	
	20	6.35	C10, C7	R	2	SCR04020	V	
	40	6.35	C10, C7	R	4	SCR04040	Y	
	80	6.35	C10, C7	R	8	SCR04080	Y	
50	5	3.175	C10, C7, C5	R	1	SCR05005	V, H	6000
	10	6.35	C10, C7, C5	R／L	1	SCR05010	V, NI, NU	
	20	9.525	C10, C7	R	1	SCR05020	V	
	50	7.938	C10, C7	R	4	SCR05050	Y	
	100	7.938	C10, C7	R	8	SCR050100	Y	
63	10	6.35	C10, C7, C5	R	1	SCR06310	V, NI, NU	7000
	20	9.525	C10, C7	R	1	SCR06320	V, NU	
80	10	6.35	C10, C7, C5	R	1	SCR08010	V, NI, NU	7000
	20	9.525	C10, C7	R	1	SCR08020	V, NU	

Table2.3.2 H-Type Specifications Ø12~50

Unit : mm

Model No.			Accuracy Grade	Threading Direction	Number of Grooves	Type-H Code of Shaft	Type of Nut	Overall Length of Shaft
d	l	Da		R : Right L : Left				
16	5	2.778	C10, C7, C5	R	1	SSR01605	H	3000
	10	2.778	C10, C7, C5	R	2	SSR01610	H	
	16	2.778	C10, C7, C5	R	4	SSR01616	H	
20	10	3.175	C10, C7, C5	R	2	SSR02010	H	3000
25	10	3.175	C10, C7, C5	R	2	SSR02510	H	6000
	25	3.175	C10, C7	R	4	SSR02525	H	
32	10	3.969	C10, C7, C5	R	1	SSR03210	H	6000
	20	3.969	C10, C7	R	2	SSR03220	H	
40	10	6.35	C10, C7	R	1	SSR04010	H	6000
50	10	6.35	C10, C7	R	1	SSR05010	H	6000

※The information is for standard production, if required accuracy grade C5 or other needs, please contact ***TBIMOTION***.

Nominal Model Code of Nut

G SFU R 025 05 T4 D + N3

Product Code

Nominal Model

S
- S : Single nut
- D : Double nut

F
- F : With flange
- C : Without flange

U
- NI : NI type nut
- NU : NU type nut
- H : H type nut
- Y : Y type nut
- V : V type nut
- U : DIN nut
- M : M type nut
- K : K type nut

Threading Direction
R : Right L : Left

Nominal Diameter
Unit : mm

Lead
Unit : mm

Number of Turns (Turn · Row)
Turn : T : 1 A : 1.5 (or 1.7/1.8) B : 2.5/2.8 C : 3.5 D : 4.8
ex : (2.5 · 2 = B2)

Flange Type
N : Not cutting S : Single cutting D : Double cutting

Nut Surface Treatment
□ : Standard B1 : Black Oxidation N1 : Hard Chrome Plating P : Phosphating
N3 : Nickel Plating N4 : Raydent N5 : Balck Chrome Plating

2-3-4 Preload of Rolled Ball Screw

The standard preloading for Rolled Ball Screw is P0. If P1 preloading is required, please contact *TBIMOTION*.

Table2.3.2 Rolled screw accuracy

Unit: μm

Accuracy Grade	C5 (DIN)	C7	C10
e300	23	50	210

2-4 Rolled Ball Screw Series

2-4-1 *TBIMOTION* Nut of Rolled Ball Screw Type

	Nut Type	Flange Type
NH／H (High Speed/Strong dust-proof type)	SFNH／SFH 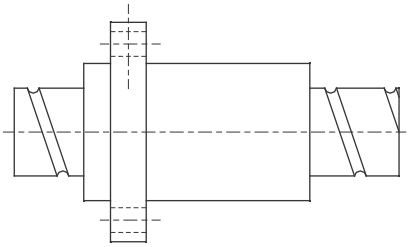 C68	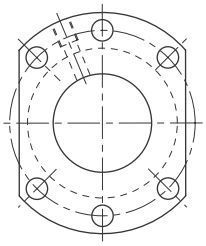 d≦32 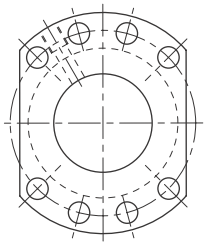 d≧40
CNH (Actuator type)	SCNH 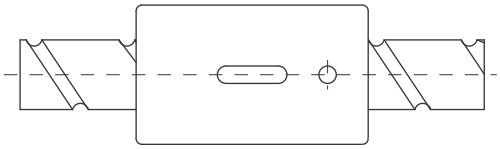 C69	No-Flange
NU／U (Strong dust-proof type)	SFNU／SFU 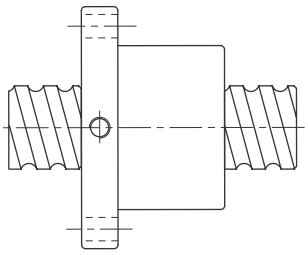 C70	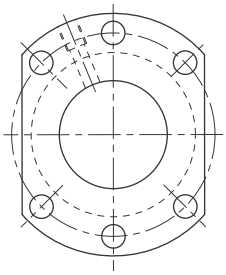 d≦32 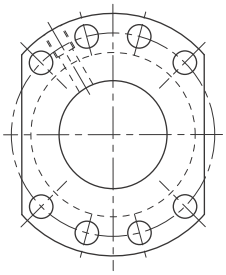 d≧40
NI／I (Strong dust-proof type)	SFNI／SFI 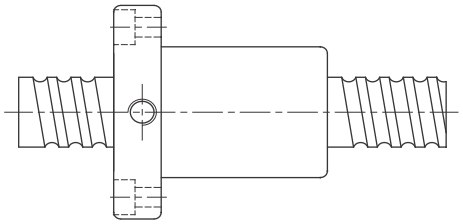 C71	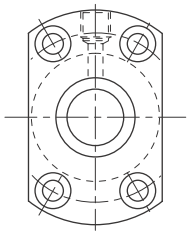 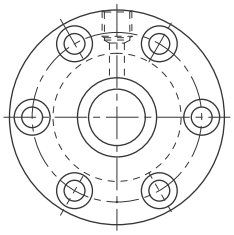

Oskoyi Ballbearing

	Nut Type	Flange Type
M (Design for Milling)	SFM 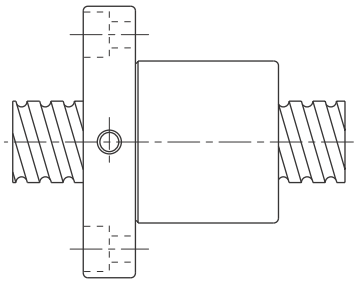 C71	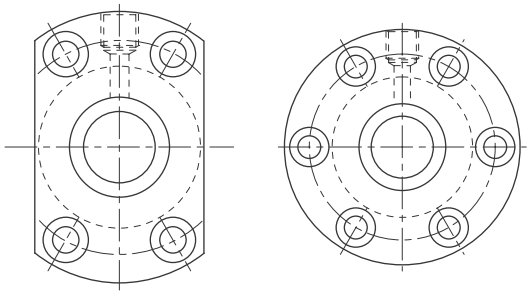
V (High Load External Circulation type)	SFV 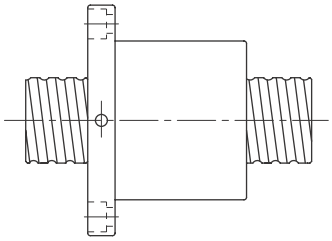 C72	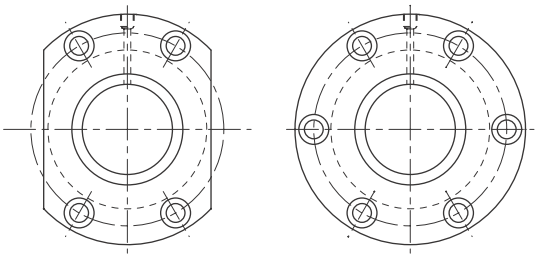
Y (High DM-N Rating)	SFY 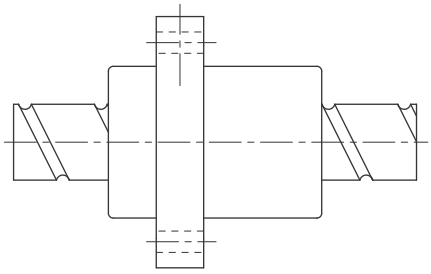 C73	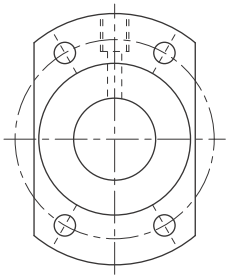
XSY (Miniature type)	XSY 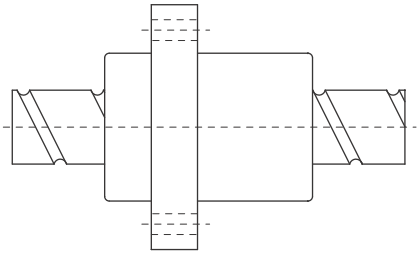 C74	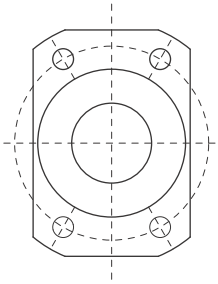

	Nut Type	Flange Type
CNI／I (Standard)	SCNI／SCI 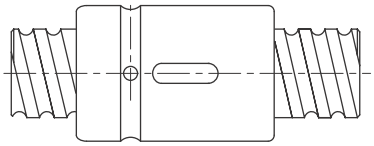 C75	No-Flange
K (Miniature type)	SFK 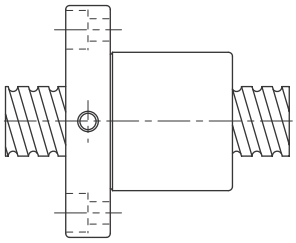 C76	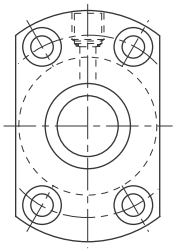 (SFK 01004) (SFK 02002) (SFK 02502)
	SFK 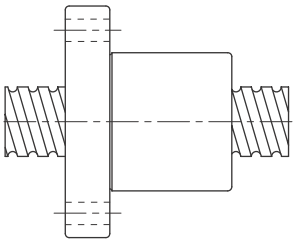 C76	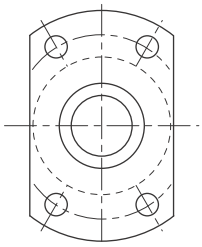
BSH	BSH 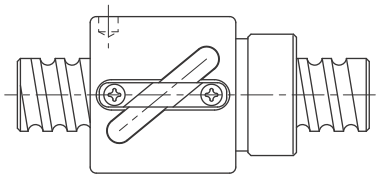 d≦12 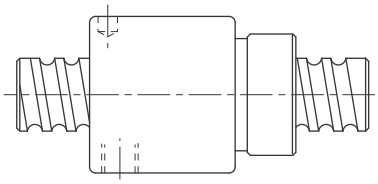 d≧14 C77	No-Flange

※The information is for standard production, if other needs please contact ***TBIMOTION*** .

تلفن : (021) 33913364 - 33951660

فکس : (021) 33985603

SFH Series Specifications

کاتالوگ ۲۰۱۷

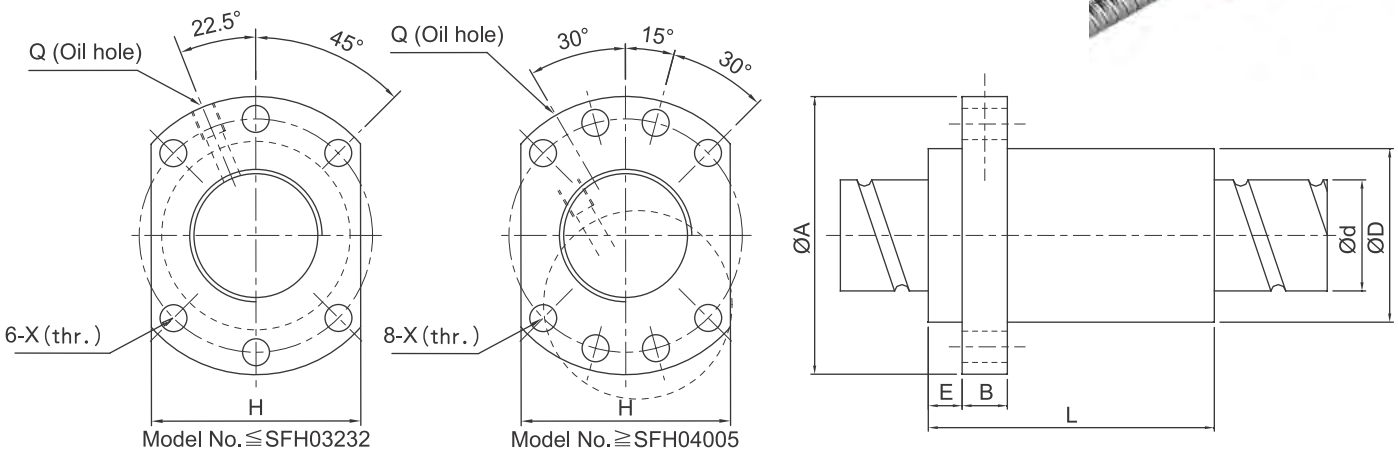

Unit : mm

Model No.	d	l	Da	Dimension										Load Rating		K kgf/μm
				D	A	E	B	L	W	H	X	Q	n	Ca (kgf)	Coa (kgf)	
SFH01205-2.8	12	5	2.5	24	40	5	10	30	32	30	4.5		2.8x1	661	1316	19
SFH01605-3.8	15	5	2.778	28	48	5	10	37	38	40	5.5	M6	3.8x1	1112	2507	30
SFH01610-2.8		10	2.778	28	48	5	10	45	38	40	5.5	M6	2.8x1	839	1827	23
SFH01616-1.8		16	2.778	28	48	5	10	45	38	40	5.5	M6	1.8x1	552	1137	14
SFH02005-3.8	20	5	3.175	36	58	7	10	37	47	44	6.6	M6	3.8x1	1484	3681	37
SFH02010-3.8		10	3.175	36	58	7	10	55	47	44	6.6	M6	3.8x1	1516	3833	40
SFH02020-1.8		20	3.175	36	58	7	10	54	47	44	6.6	M6	1.8x1	764	1758	19
SFH02505-3.8	25	5	3.175	40	62	7	10	37	51	48	6.6	M6	3.8x1	1650	4658	43
SFH02510-3.8		10	3.175	40	62	7	12	55	51	48	6.6	M6	3.8x1	1638	4633	45
SFH02525-1.8		25	3.175	40	62	7	12	64	51	48	6.6	M6	1.8x1	843	2199	22
SFH03205-3.8	32	5	3.175	50	80	9	12	37	65	62	9	M6	3.8x1	1839	6026	51
SFH03210-3.8	31	10	3.969	50	80	9	12	57	65	62	9	M6	3.8x1	2460	7255	55
SFH03220-2.8		20	3.969	50	80	9	12	76	65	62	9	M6	2.8x1	1907	5482	43
SFH04005-3.8	40	5	3.175	63	93	9	15	42	78	70	9	M6	3.8x1	2018	7589	60
SFH04010-3.8	38	10	6.35	63	93	9	14	60	78	70	9	M6	3.8x1	5035	13943	67
SFH05005-3.8	50	5	3.175	75	110	10.5	15	42	93	85	11	M8	3.8x1	2207	9542	68
SFH05010-3.8	48	10	6.35	75	110	10.5	18	60	93	85	11	M8	3.8x1	5638	17852	79

بلبرینگ اسکوئی

(اسکو صنعت تاوریژ)

OBC
Oskoyi Ballbearing Company

SFNH／SFH (DIN 69051 FORM B) Series Specifications

کاتالوگ ۲۰۱۸

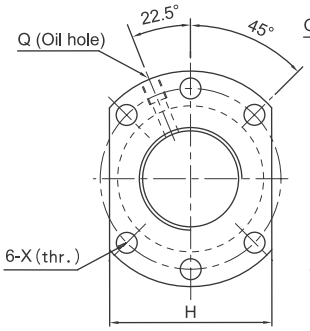

d≦32

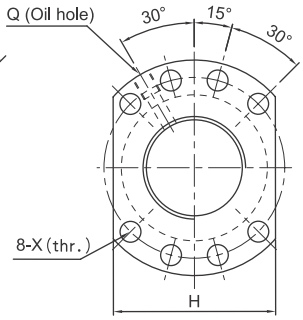

d≧40

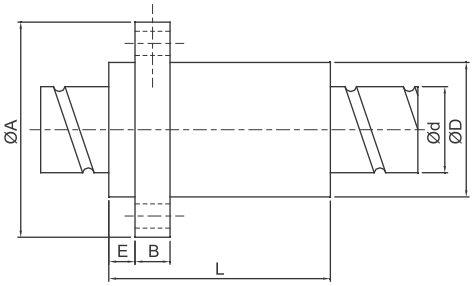

SFH

SFNH

Unit : mm

	Model No.	d	l	Da	Dimension										Load Rating		K kgf／μm
					D	A	E	B	L	W	H	X	Q	n	Ca (kgf)	Coa (kgf)	
★	SFH01205-2.8	12	5	2.5	24	40	5	10	30	32	30	4.5		2.8x1	661	1316	19
★	SFH01210-2.8		10	2.5	24	40	5	10	45	32	30	4.5		2.8x1	642	1287	19
★	SFH01605-3.8	15	5	2.778	28	48	5	10	37	38	40	5.5	M6	3.8x1	1112	2507	30
★	SFH01610-2.8		10	2.778	28	48	5	10	45	38	40	5.5	M6	2.8x1	839	1821	23
★	SFH01616-1.8		16	2.778	28	48	5	10	45	38	40	5.5	M6	1.8x1	552	1137	14
★	SFH01616-2.8		16	2.778	28	48	5	10	61	38	40	5.5	M6	2.8x1	808	1769	22
★	SFH01620-1.8		20	2.778	28	48	5	10	58	38	40	5.5	M6	1.8x1	554	1170	14
★	SFH02005-3.8	20	5	3.175	36	58	7	10	37	47	44	6.6	M6	3.8x1	1484	3681	37
★	SFH02010-3.8		10	3.175	36	58	7	10	55	47	44	6.6	M6	3.8x1	1516	3833	40
★	SFH02020-1.8		20	3.175	36	58	7	10	54	47	44	6.6	M6	1.8x1	764	1758	19
★	SFH02020-2.8		20	3.175	36	58	7	10	74	47	44	6.6	M6	2.8x1	1118	2734	29
★	SFH02505-3.8	25	5	3.175	40	62	7	10	37	51	48	6.6	M6	3.8x1	1650	4658	43
★	SFH02510-3.8		10	3.175	40	62	7	12	55	51	48	6.6	M6	3.8x1	1638	4633	45
★	SFH02525-1.8		25	3.175	40	62	7	12	64	51	48	6.6	M6	1.8x1	843	2199	22
★	SFH02525-2.8		25	3.175	40	62	7	12	89	51	48	6.6	M6	2.8x1	1232	3421	34
	SFH03205-3.8	32	5	3.175	50	80	9	12	37	65	62	9	M6	3.8x1	1839	6026	51
	SFH03210-3.8	31	10	3.969	50	80	9	12	57	65	62	9	M6	3.8x1	2460	7255	55
	SFH03220-2.8		20	3.969	50	80	9	12	76	65	62	9	M6	2.8x1	1907	5482	43
	SFH03232-1.8		32	3.969	50	80	9	12	80	65	62	9	M6	1.8x1	1257	3426	27
	SFH03232-2.8		32	3.969	50	80	9	12	112	65	62	9	M6	2.8x1	1838	5329	42
	SFH04005-3.8	40	5	3.175	63	93	9	15	42	78	70	9	M8	3.8x1	2018	7589	60
	SFH04010-3.8	38	10	6.35	63	93	9	14	60	78	70	9	M8	3.8x1	5035	13943	67
	SFH04020-2.8		20	6.35	63	93	9	14	80	78	70	9	M8	2.8x1	3959	10715	54
	SFH04040-1.8		40	6.35	63	93	9	14	98	78	70	9	M8	1.8x1	2585	6648	34
	SFH04040-2.8		40	6.35	63	93	9	14	138	78	70	9	M8	2.8x1	3780	10341	52
	SFH05005-3.8	50	5	3.175	75	110	10.5	15	42	93	85	11	M8	3.8x1	2207	9542	68
	SFH05010-3.8	48	10	6.35	75	110	10.5	18	60	93	85	11	M8	3.8x1	5638	17852	79
	SFH05020-3.8		20	6.35	75	110	10.5	18	100	93	85	11	M8	3.8x1	5749	18485	87
	SFH05050-1.8		50	6.35	75	110	10.5	18	120	93	85	11	M8	1.8x1	2946	8749	42
	SFH05050-2.8		50	6.35	75	110	10.5	18	170	93	85	11	M8	2.8x1	4308	13610	65

※★Actuator type available (SFNH series).

تلفن : (021) 33913364 - 33951660

فکس : (021) 33985603

SCNH Series Specifications

کاتالوگ ۲۰۱۸

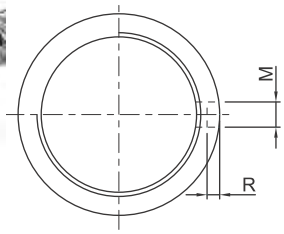

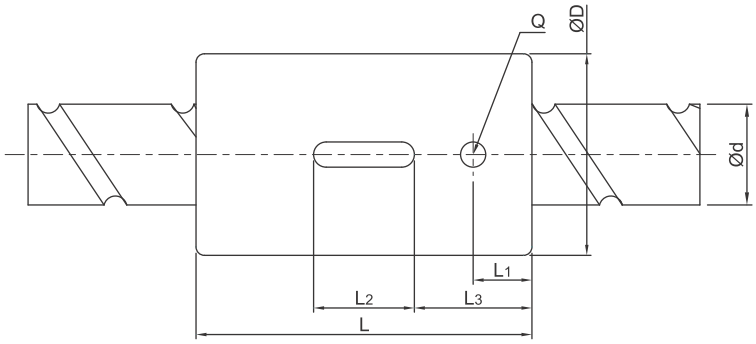

Unit : mm

Model No.	d	l	Da	Dimension									Load Rating		K kgf/μm
				D	L	L1	L2	L3	M	R	Q	n	Ca (kgf)	Coa (kgf)	
SCNH01205-4.8	12	5	2.5	24	40	7	12	14	3	1.5	3	4.8x1	536	794	34
SCNH01210-2.8		10	2.5	24	45	8	15	15	3	1.5	3	2.8x1	642	1287	19
XCNH01210-1.8		10	2.5	24	40	10.5	12	14	3	1.5	3	1.8x1	422	771	33
SCNH01605-5.8	15	5	2.778	28	45	7	20	12.5	5	3	3	5.8x1	1599	3827	49
SCNH01610-2.8		10	2.778	28	45	7	20	12.5	5	3	3	2.8x1	839	1821	23
SCNH01616-1.8		16	2.778	28	45	7	20	12.5	5	3	3	1.8x1	552	1137	18
SCNH01620-1.8		20	2.778	28	58	10	20	19	5	3	3	1.8x1	808	1769	14
SCNH02005-5.8	20	5	3.175	36	47	8	20	13.5	5	3	3	5.8x1	2134	5619	60
SCNH02010-3.8		10	3.175	36	55	8	20	17.5	5	3	3	3.8x1	1516	3833	40
SCNH02020-1.8		20	3.175	36	55	8	20	17.5	5	3	3	1.8x1	764	1758	19

بلبرینگ اسکوئی

(اسکو صنعت تاوریژ)

OBC
Oskoyi Ballbearing Company

SFNU Series Specifications

کاتالوگ ۲۰۱۷

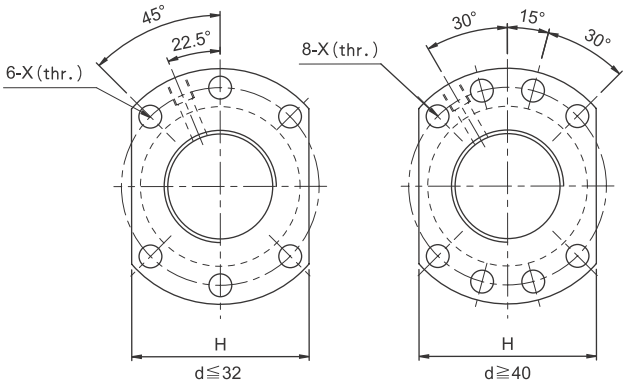

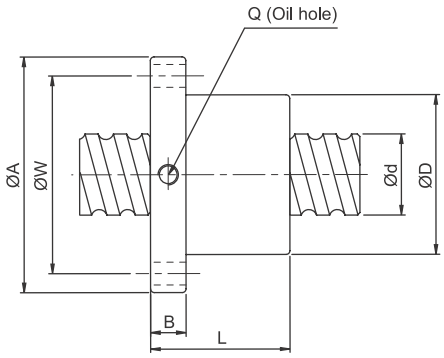

Unit: mm

Model No.	d	l	Da	Dimension									Load Rating		K kgf/μm
				D	A	B	L	W	H	X	Q	n	Ca (kgf)	Coa (kgf)	
SFNU01605-4	16	5	3.175	28	48	10	45	38	40	5.5	M6	1x4	1380	3052	32
SFNU01610-3		10	3.175	28	48	10	57	38	40	5.5	M6	1x3	1103	2401	26
SFNU02005-4	20	5	3.175	36	58	10	51	47	44	6.6	M6	1x4	1551	3875	39
SFNU02505-4	25	5	3.175	40	62	10	51	51	48	6.6	M6	1x4	1724	4904	45
SFNU02510-4		10	4.762	40	62	12	80	51	48	6.6	M6	1x4	2954	7295	50
SFNU03205-4	32	5	3.175	50	80	12	52	65	62	9	M6	1x4	1922	6343	54
SFNU03210-4		10	6.35	50	80	12	85	65	62	9	M6	1x4	4805	12208	61
SFNU04005-4	40	5	3.175	63	93	14	55	78	70	9	M8	1x4	2110	7988	63
SFNU04010-4		10	6.35	63	93	14	88	78	70	9	M8	1x4	5399	15500	73
SFNU05010-4	50	10	6.35	75	110	16	88	93	85	11	M8	1x4	6004	19614	85
SFNU06310-4	63	10	6.35	90	125	18	93	108	95	11	M8	1x4	6719	25358	99
SFNU08010-4	80	10	6.35	105	145	20	93	125	110	13.5	M8	1x4	7346	31953	109

تلفن : (021) 33913364 - 33951660

فکس : (021) 33985603

SFU (DIN 69051 FORM B) Series Specifications

کاتالوگ ۲۰۱۷

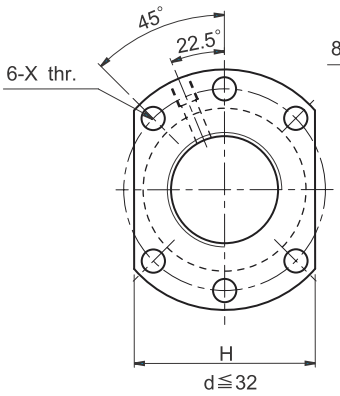

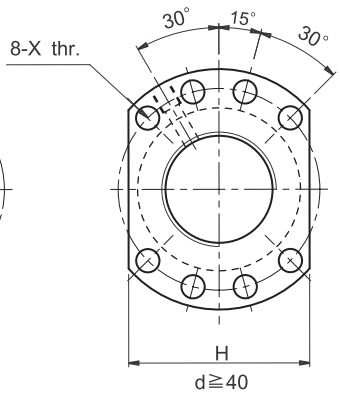

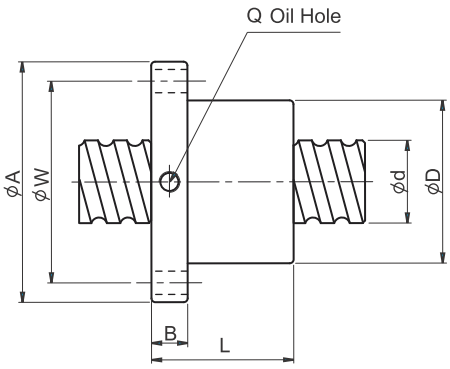

Unit : mm

	Model No.	Dimensions														
		d	l	Da	D	A	B	L	W	X	H	Q	n	Ca	Coa	K
	SFU01204-4	12	4	2.5	24	40	10	40	32	4.5	30		1x4	902	1884	26
☆	SFU01604-4	16	4	2.381	28	48	10	40	38	5.5	40	M6	1x4	973	2406	32
☆	SFU01605-4		5	3.175	28	48	10	50	38	5.5	40	M6	1x4	1380	3052	32
☆	SFU01610-3		10	3.175	28	48	10	57	38	5.5	40	M6	1x3	1103	2401	26
	SFU02004-4	20	4	2.381	36	58	10	42	47	6.6	44	M6	1x4	1066	2987	38
☆	SFU02005-4		5	3.175	36	58	10	51	47	6.6	44	M6	1x4	1551	3875	39
	SFU02504-4	25	4	2.381	40	62	10	42	51	6.6	48	M6	1x4	1180	3795	43
☆	SFU02505-4		5	3.175	40	62	10	51	51	6.6	48	M6	1x4	1724	4904	45
	SFU02506-4		6	3.969	40	62	10	54	51	6.6	48	M6	1x4	2318	6057	47
	SFU02508-4		8	4.762	40	62	10	63	51	6.6	48	M6	1x4	2963	7313	49
☆	SFU02510-4		10	4.762	40	62	12	85	51	6.6	48	M6	1x4	2954	7295	50
	SFU03204-4	32	4	2.381	50	80	12	44	65	9	62	M6	1x4	1296	4838	51
☆	SFU03205-4		5	3.175	50	80	12	52	65	9	62	M6	1x4	1922	6343	54
	SFU03206-4		6	3.969	50	80	12	57	65	9	62	M6	1x4	2632	7979	57
	SFU03208-4		8	4.762	50	80	12	65	65	9	62	M6	1x4	3387	9622	60
☆	SFU03210-4		10	6.35	50	80	12	90	65	9	62	M6	1x4	4805	12208	61
☆	SFU04005-4	40	5	3.175	63	93	14	55	78	9	70	M8	1x4	2110	7988	63
	SFU04006-4		6	3.969	63	93	14	60	78	9	70	M6	1x4	2873	9913	66
	SFU04008-4		8	4.762	63	93	14	67	78	9	70	M6	1x4	3712	11947	70
☆	SFU04010-4		10	6.35	63	93	14	93	78	9	70	M8	1x4	5399	15500	73
☆	SFU05010-4	50	10	6.35	75	110	16	93	93	11	85	M8	1x4	6004	19614	85
☆	SFU05020-4		20	7.144	75	110	16	138	93	11	85	M8	1x4	7142	22588	94
	SFU06310-4	63	10	6.35	90	125	18	98	108	11	95	M8	1x4	6719	25358	99
	SFU06320-4		20	9.525	95	135	20	149	115	13.5	100	M8	1x4	11444	36653	112
☆	SFU08010-4	80	10	6.35	105	145	20	98	125	13.5	110	M8	1x4	7346	31953	109
	SFU08020-4		20	9.525	125	165	25	154	145	13.5	130	M8	1x4	12911	47747	138
	SFU10020-4	100	20	9.525	150	202	30	180	170	17.5	155	M8	1x4	14303	60698	162

Note: with sign ★ can be produced in left helix

بلبرینگ اسکوئی

(اسکو صنعت تاوریژ)

OBC
Oskoyi Ballbearing Company

SFNU／SFU (DIN 69051 FORM B) Series Specifications

کاتالوگ ۲۰۱۸

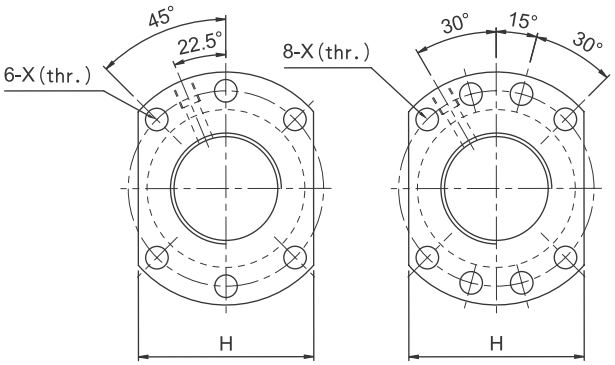

d≦32 d≧40

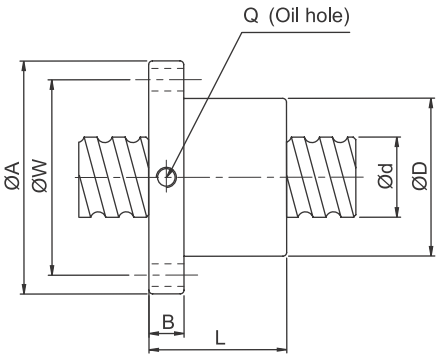

Unit: mm

Model No.	d	l	Da	Dimension									Load Rating		K kgf／μm
				D	A	B	L	W	H	X	Q	n	Ca (kgf)	Coa (kgf)	
SFNU01605-4	16	5	3.175	28	48	10	45	38	40	5.5	M6	1x4	1380	3052	32
SFNU01610-3		10	3.175	28	48	10	57	38	40	5.5	M6	1x3	1103	2401	26
SFNU02005-4	20	5	3.175	36	58	10	51	47	44	6.6	M6	1x4	1551	3875	39
SFNU02505-4	25	5	3.175	40	62	10	51	51	48	6.6	M6	1x4	1724	4904	45
SFNU02510-4		10	4.762	40	62	12	80	51	48	6.6	M6	1x4	2954	7295	50
SFNU03205-4	32	5	3.175	50	80	12	52	65	62	9	M6	1x4	1922	6343	54
SFNU03210-4		10	6.35	50	80	12	85	65	62	9	M6	1x4	4805	12208	61
SFNU04005-4	40	5	3.175	63	93	14	55	78	70	9	M8	1x4	2110	7988	63
SFNU04010-4		10	6.35	63	93	14	88	78	70	9	M8	1x4	5399	15500	73
SFNU05010-4	50	10	6.35	75	110	16	88	93	85	11	M8	1x4	6004	19614	85
SFNU06310-4	63	10	6.35	90	125	18	93	108	95	11	M8	1x4	6719	25358	99
SFNU08010-4	80	10	6.35	105	145	20	93	125	110	13.5	M8	1x4	7346	31953	109
SFU01204-4	12	4	2.5	24	40	10	40	32	30	4.5		1x4	902	1884	26
SFU01604-4	16	4	2.381	28	48	10	40	38	40	5.5	M6	1x4	973	2406	32
SFU02004-4	20	4	2.381	36	58	10	42	47	44	6.6	M6	1x4	1066	2987	38
SFU02504-4	25	4	2.381	40	62	10	42	51	48	6.6	M6	1x4	1180	3795	43
SFU02506-4		6	3.969	40	62	10	54	51	48	6.6	M6	1x4	2318	6057	47
SFU02508-4		8	4.762	40	62	10	63	51	48	6.6	M6	1x4	2963	7313	49
SFU03204-4	32	4	2.381	50	80	12	44	65	62	9	M6	1x4	1296	4838	51
SFU03206-4		6	3.969	50	80	12	57	65	62	9	M6	1x4	2632	7979	57
SFU03208-4		8	4.762	50	80	12	65	65	62	9	M6	1x4	3387	9622	60
SFU04006-4	40	6	3.969	63	93	14	60	78	70	9	M6	1x4	2873	9913	66
SFU04008-4		8	4.762	63	93	14	67	78	70	9	M6	1x4	3712	11947	70
SFU05020-4	50	20	7.144	75	110	16	138	93	85	11	M8	1x4	7142	22588	94
SFU06320-4	63	20	9.525	95	135	20	149	115	100	13.5	M8	1x4	11444	36653	112
SFU08020-4	80	20	9.525	125	165	25	154	145	130	13.5	M8	1x4	12911	47747	138
SFU10020-4	100	20	9.525	150	202	30	180	170	155	17.5	M8	1x4	14303	60698	162

تلفن : (021) 33913364 - 33951660

فکس : (021) 33985603

SFNI Series Specifications

کاتالوگ ۲۰۱۷

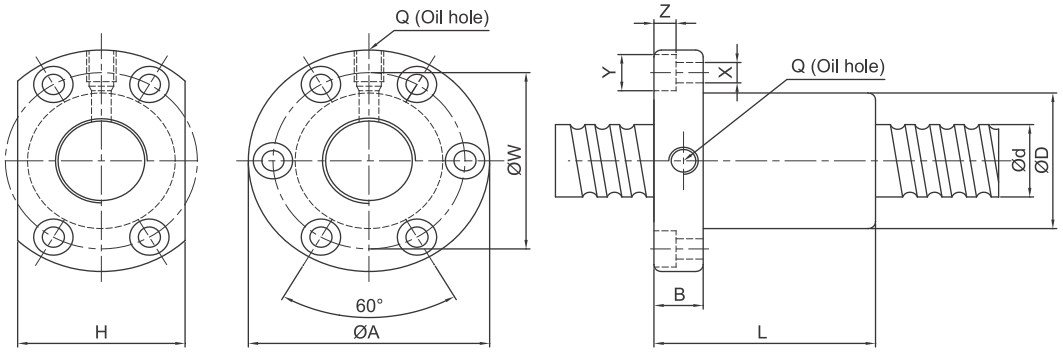

Unit : mm

Model No.	d	l	Da	Dimension											Load Rating		K kgf/μm
				D	A	B	L	W	H	X	Y	Z	Q	n	Ca (kgf)	Coa (kgf)	
SFNI01605-4	16	5	3.175	30	49	10	45	39	34	4.5	8	4.5	M6	1x4	1380	3052	33
SFNI01610-3		10	3.175	34	58	10	57	45	34	5.5	9.5	5.5	M6	1x3	1103	2401	27
SFNI02005-4	20	5	3.175	34	57	11	51	45	40	5.5	9.5	5.5	M6	1x4	1551	3875	39
SFNI02505-4	25	5	3.175	40	63	11	51	51	46	5.5	9.5	5.5	M8	1x4	1724	4904	45
SFNI02510-4		10	4.762	46	72	12	80	58	52	6.5	11	6.5	M6	1x4	2954	7295	51
SFNI03205-4	32	5	3.175	46	72	12	52	58	52	6.5	11	6.5	M8	1x4	1922	6343	52
SFNI03210-4		10	6.35	54	88	15	85	70	62	9	14	8.5	M8	1x4	4805	12208	62
SFNI04005-4	40	5	3.175	56	90	15	55	72	64	9	14	8.5	M8	1x4	2110	7988	59
SFNI04010-4		10	6.35	62	104	18	88	82	70	11	17.5	11	M8	1x4	5399	15500	72
SFNI05010-4	50	10	6.35	72	114	18	88	92	82	11	17.5	11	M8	1x4	6004	19614	83
SFNI06310-4	63	10	6.35	85	131	22	93	107	95	14	20	13	M8	1x4	6719	25358	95
SFNI08010-4	80	10	6.35	105	150	22	93	127	115	14	20	13	M8	1x4	7346	31953	109

بلبرینگ اسکوئی

(اسکو صنعت تاوریژ)

OBC
Oskoyi Ballbearing Company

SFI Series Specifications

کاتالوگ ۲۰۱۷

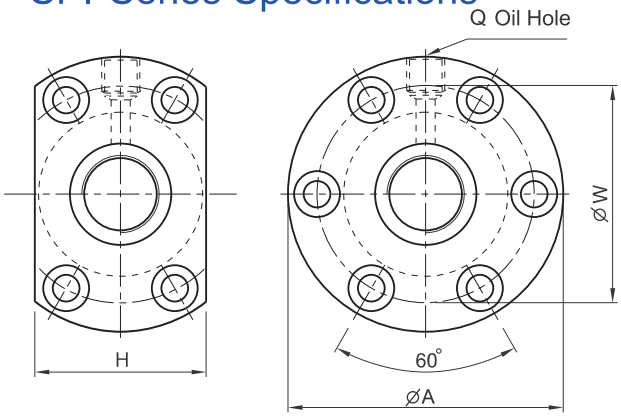

Unit : mm

	Model No.	Dimensions																
		d	l	Da	D	A	B	L	W	H	X	Y	Z	Q	n	Ca	Coa	K
	SFI01604-4	16	4	2.381	30	49	10	45	39	34	4.5	8	4.5	M6	1x4	973	2406	32
★	SFI01605-4		5	3.175	30	49	10	50	39	34	4.5	8	4.5	M6	1x4	1380	3052	33
★	SFI01610-3		10	3.175	34	58	10	57	45	34	5.5	9.5	5.5	M6	1x3	1103	2401	27
	SFI02004-4	20	4	2.381	34	57	11	46	45	40	5.5	9.5	5.5	M6	1x4	1066	2987	37
★	SFI02005-4		5	3.175	34	57	11	51	45	40	5.5	9.5	5.5	M6	1x4	1551	3875	39
★	SFI0205T-4		5.08	3.175	34	57	11	51	45	40	5.5	9.5	5.5	M6	1x4	1550	3875	39
★	SFI02504-4	25	4	2.381	40	63	11	46	51	46	5.5	9.5	5.5	M6	1x4	1180	3795	43
★	SFI02505-4		5	3.175	40	63	11	51	51	46	5.5	9.5	5.5	M8	1x4	1724	4904	45
	SFI02510-4		10	4.762	46	72	12	85	58	52	6.5	11	6.5	M6	1x4	2954	7295	51
	SFI03204-4	32	4	2.381	46	72	12	47	58	52	6.5	11	6.5	M6	1x4	1296	4838	49
★	SFI03205-4		5	3.175	46	72	12	52	58	52	6.5	11	6.5	M8	1x4	1922	6343	52
★	SFI03210-4		10	6.35	54	88	15	90	70	62	9	14	8.5	M8	1x4	4805	12208	62
★	SFI04005-4	40	5	3.175	56	90	15	55	72	64	9	14	8.5	M8	1x4	2110	7988	59
★	SFI04010-4		10	6.35	62	104	18	93	82	70	11	17.5	11	M8	1x4	5399	15500	72
★	SFI05010-4	50	10	6.35	72	114	18	93	92	82	11	17.5	11	M8	1x4	6004	19614	83
★	SFI06310-4	63	10	6.35	85	131	22	98	107	95	14	20	13	M8	1x4	6719	25358	95
	SFI08010-4	80	10	6.35	105	150	22	98	127	115	14	20	13	M8	1x4	7346	31953	109

Note: with si g★can be produced in left helix

تلفن : (021) 33913364 - 33951660

فکس : (021) 33985603

SFNI／SFI Series Specifications

کاتالوگ ۲۰۱۸

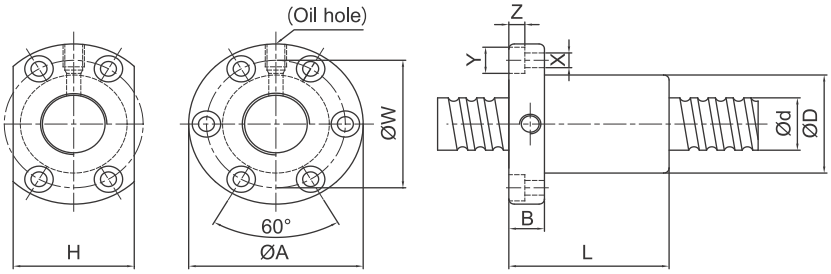

Unit : mm

Model No.	d	l	Da	Dimension											Load Rating		K kgf／μm
				D	A	B	L	W	H	X	Y	Z	Q	n	Ca (kgf)	Coa (kgf)	
SFNI01605-4	16	5	3.175	30	49	10	45	39	34	4.5	8	4.5	M6	1x4	1380	3052	33
SFNI01610-3		10	3.175	34	58	10	57	45	34	5.5	9.5	5.5	M6	1x3	1103	2401	27
SFNI02005-4	20	5	3.175	34	57	11	51	45	40	5.5	9.5	5.5	M6	1x4	1551	3875	39
SFNI02505-4	25	5	3.175	40	63	11	51	51	46	5.5	9.5	5.5	M8	1x4	1724	4904	45
SFNI02510-4		10	4.762	46	72	12	80	58	52	6.5	11	6.5	M6	1x4	2954	7295	51
SFNI03205-4	32	5	3.175	46	72	12	52	58	52	6.5	11	6.5	M8	1x4	1922	6343	52
SFNI03210-4		10	6.35	54	88	15	85	70	62	9	14	8.5	M8	1x4	4805	12208	62
SFNI04005-4	40	5	3.175	56	90	15	55	72	64	9	14	8.5	M8	1x4	2110	7988	59
SFNI04010-4		10	6.35	62	104	18	88	82	70	11	17.5	11	M8	1x4	5399	15500	72
SFNI05010-4	50	10	6.35	72	114	18	88	92	82	11	17.5	11	M8	1x4	6004	19614	83
SFNI06310-4	63	10	6.35	85	131	22	93	107	95	14	20	13	M8	1x4	6719	25358	95
SFNI08010-4	80	10	6.35	105	150	22	93	127	115	14	20	13	M8	1x4	7346	31953	109
SFI01604-4	16	4	2.381	30	49	10	45	39	34	4.5	8	4.5	M6	1x4	973	2406	32
SFI02004-4	20	4	2.381	34	57	11	46	45	40	5.5	9.5	5.5	M6	1x4	1066	2987	37
SFI0205T-4		5.08	3.175	34	57	11	51	45	40	5.5	9.5	5.5	M6	1x4	1550	3875	39
☆ SFI02504-4	25	4	2.381	40	63	11	46	51	46	5.5	9.5	5.5	M6	1x4	1180	3795	43
SFI0255T-4		5.08	3.175	40	63	11	51	51	46	5.5	9.5	5.5	M8	1x4	1724	4904	45
SFI03204-4	32	4	2.381	46	72	12	47	58	52	6.5	11	6.5	M6	1x4	1296	4838	49

SFM Series Specifications (Design for Milling)

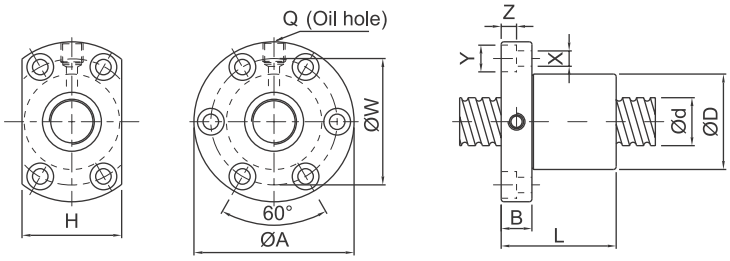

Unit : mm

Model No.	d	l	Da	Dimension											Load Rating		K kgf／μm
				D	A	B	L	W	H	X	Y	Z	Q	n	Ca (kgf)	Coa (kgf)	
☆ SFM03205-4	32	5	3.175	48	74	12	52	60	60	6.5	11	6.5	M8	1x4	1922	6343	53
☆ SFM0325T-4		5.08	3.175	48	74	12	53	60	60	6.5	11	6.5	M8	1x4	1922	6343	53

Note : For double ball screw nut order, please contact *TBIMOTION* in advance.

※☆Left helix available

بلبرینگ اسکوئی

(اسکو صنعت تاوریژ)

OBC
Oskoyi Ballbearing Company

SFV Series Specifications

کاتالوگ ۲۰۱۷

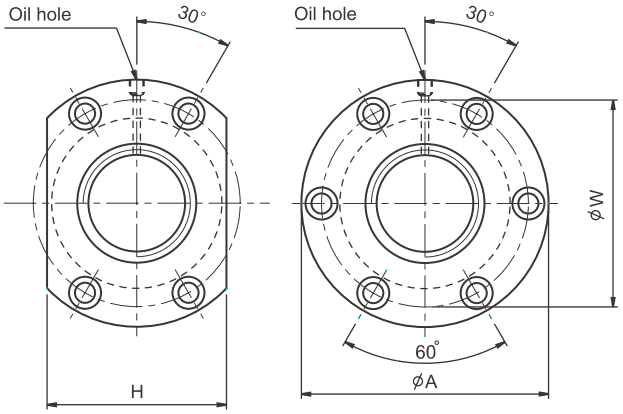

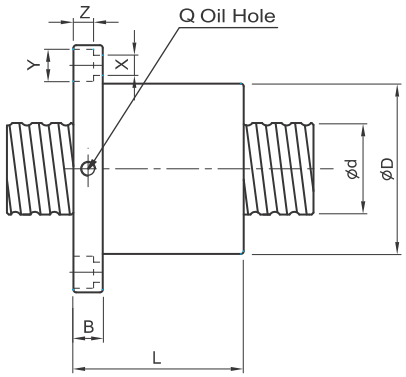

Unit : mm

Model No.	Dimensions																
	d	l	Da	D	A	B	L	W	H	X	Y	Z	Q	n	Ca	Coa	K
SFV01205-2.8	12	5	2.5	30	50	10	42	40	32	4.5	8	4.5	M6	2.8x1	661	1316	19
SFV01210-2.7		10	2.5	30	50	10	53	40	32	4.5	8	4.5	M6	2.7x1	623	1241	18
SFV01510-2.7	15	10	3.175	34	58	10	57	45	34	5.5	9.5	5.5	M6	2.7x1	972	2020	23
SFV01604-3.8	16	4	2.381	34	57	11	45	45	34	5.5	9.5	5.5	M6	3.8x1	931	2285	31
SFV01605-4.8		5	3.175	40	63	11	58	51	42	5.5	9.5	5.5	M6	4.8x1	1614	3662	40
SFV01610-2.7		10	3.175	40	63	11	56	51	42	5.5	9.5	5.5	M6	2.7x1	1008	2161	24
SFV02004-4.8	20	4	2.381	40	60	10	50	50	40	4.5	8	4	M6	4.8x1	1247	3584	45
SFV02005-4.8		5	3.175	44	67	11	57	55	52	5.5	9.5	5.5	M6	4.8x1	1814	4650	47
SFV02010-2.7		10	3.969	46	74	13	57	59	46	6.6	11	6.5	M6	2.7x1	1518	3398	30
SFV02020-1.8		20	3.175	46	74	13	70	59	46	6.6	11	6.5	M6	1.8x1	764	1758	19
SFV02505-4.8	25	5	3.175	50	73	11	55	61	52	5.5	9.5	5.5	M8	4.8x1	2017	5884	56
SFV02506-4.8		6	3.969	53	76	11	62	64	58	5.5	9.5	5.5	M6	4.8x1	2711	7268	58
SFV02508-4.8		8	4.762	56	85	13	70	71	64	6.5	11	6.5	M6	4.8x1	3466	8776	61
SFV02510-2.7		10	6.35	68	102	15	70	84	82	9	14	8.5	M8	2.7x1	3040	6547	37
SFV02525-1.8		25	3.175	50	73	13	83	61	52	5.5	9.5	5.5	M8	1.8x1	843	2199	22
SFV03204-4.8	32	4	2.381	54	81	12	50	67	64	6.6	11	6.5	M6	4.8x1	1517	5806	62
SFV03205-4.8		5	3.175	58	85	12	56	71	64	6.6	11	6.5	M8	4.8x1	2249	7612	66
SFV03206-4.8		6	3.969	62	89	12	60	75	68	6.6	11	6.5	M8	4.8x1	3079	9575	70
SFV03208-4.8		8	4.762	66	100	15	75	82	76	9	14	8.5	M8	4.8x1	3962	11547	74
SFV03210-4.8		10	6.35	74	108	15	96	90	82	9	14	9	M8	4.8x1	5620	14649	76
SFV03220-2.7		20	6.35	74	108	16	100	90	82	9	14	8.5	M8	2.7x1	3509	8644	46
SFV04005-4.8	40	5	3.175	67	101	15	59	83	72	9	14	8.5	M8	4.8x1	2468	9586	76
SFV04010-4.8		10	6.35	82	124	18	100	102	94	11	17.5	11	M8	4.8x1	6316	18600	90
SFV04020-2.7		20	6.35	82	124	18	100	102	90	11	17.5	11	M8	2.7x1	3935	10893	56
SFV05005-4.8	50	5	3.175	80	114	15	60	96	82	9	14	8.5	M8	4.8x1	2698	12053	87
SFV05010-4.8		10	6.35	93	135	16	93	113	98	11	17.5	11	M8	4.8x1	7023	23537	106
SFV05020-2.7		20	9.525	105	152	28	121	128	110	14	20	13	M8	2.7x1	7336	19700	68
SFV06310-4.8	63	10	6.35	108	154	22	105	130	110	14	20	13	M8	4.8x1	7860	30430	126
SFV06320-2.7		20	9.525	122	180	28	120	150	130	18	26	17.5	M8	2.7x1	8162	24741	80
SFV08010-4.8	80	10	6.35	130	176	22	105	152	132	14	20	13	M8	4.8x1	8593	38344	145
SFV08020-4.8		20	9.525	143	204	28	180	172	148	18	26	18	M8	4.8x1	15103	57296	168
SFV08020-7.6		20	9.525	143	204	28	240	172	148	18	26	18	M8	3.8x2	22423	90719	260

Note: with sign ★ can be produced in left helix

تلفن : (021) 33913364 - 33951660

فکس : (021) 33985603

SFV Series Specifications

کاتالوگ ۲۰۱۸

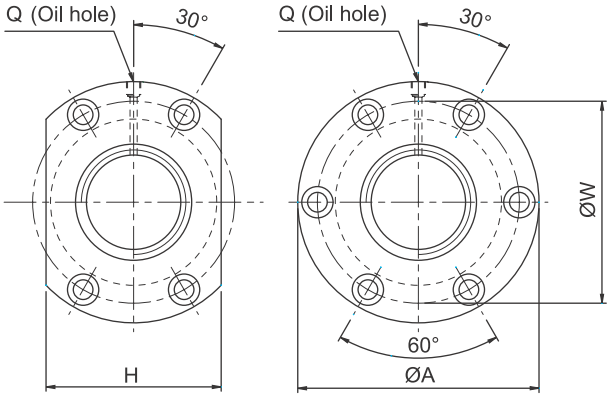

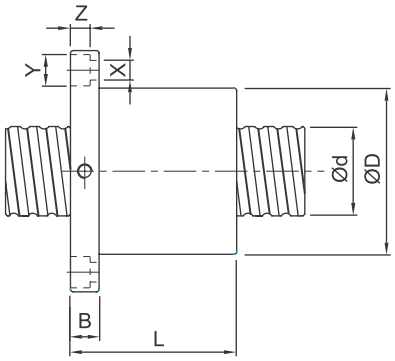

Unit : mm

Model No.	d	l	Da	Dimension											Load Rating		K kgf/μm
				D	A	B	L	W	H	X	Y	Z	Q	n	Ca (kgf)	Coa (kgf)	
SFV01205-2.8	12	5	2.5	30	50	10	42	40	32	4.5	8	4.5	M6	2.8x1	661	1316	19
SFV01210-2.7		10	2.5	30	50	10	53	40	32	4.5	8	4.5	M6	2.7x1	623	1241	18
SFV01510-2.7	15	10	3.175	34	58	10	57	45	34	5.5	9.5	5.5	M6	2.7x1	972	2020	23
SFV01604-3.8	16	4	2.381	34	57	11	45	45	34	5.5	9.5	5.5	M6	3.8x1	931	2285	31
SFV01605-4.8		5	3.175	40	63	11	58	51	42	5.5	9.5	5.5	M6	4.8x1	1614	3662	40
SFV01610-2.7		10	3.175	40	63	11	56	51	42	5.5	9.5	5.5	M6	2.7x1	1008	2161	24
SFV02004-4.8	20	4	2.381	40	60	10	50	50	40	4.5	8	4	M6	4.8x1	1247	3584	45
SFV02005-4.8		5	3.175	44	67	11	57	55	52	5.5	9.5	5.5	M6	4.8x1	1814	4650	47
SFV02010-2.7		10	3.969	46	74	13	57	59	46	6.6	11	6.5	M6	2.7x1	1518	3398	30
SFV02020-1.8		20	3.175	46	74	13	70	59	46	6.6	11	6.5	M6	1.8x1	764	1758	19
SFV02505-4.8	25	5	3.175	50	73	11	55	61	52	5.5	9.5	5.5	M8	4.8x1	2017	5884	56
SFV02510-2.7		10	6.35	68	102	15	70	84	82	9	14	8.5	M8	2.7x1	3040	6547	37
SFV02525-1.8		25	3.175	50	73	13	83	61	52	5.5	9.5	5.5	M8	1.8x1	843	2199	22
SFV03204-4.8	32	4	2.381	54	81	12	50	67	64	6.6	11	6.5	M6	4.8x1	1517	5806	62
SFV03205-4.8		5	3.175	58	85	12	56	71	64	6.6	11	6.5	M8	4.8x1	2249	7612	66
SFV03210-4.8		10	6.35	74	108	15	96	90	82	9	14	9	M8	4.8x1	5620	14649	76
SFV03220-2.7		20	6.35	74	108	16	100	90	82	9	14	8.5	M8	2.7x1	3509	8644	46
SFV04005-4.8	40	5	3.175	67	101	15	59	83	72	9	14	8.5	M8	4.8x1	2468	9586	76
SFV04010-4.8		10	6.35	82	124	18	100	102	94	11	17.5	11	M8	4.8x1	6316	18600	90
SFV04020-2.7		20	6.35	82	124	18	100	102	90	11	17.5	11	M8	2.7x1	3935	10893	56
SFV05005-4.8	50	5	3.175	80	114	15	60	96	82	9	14	8.5	M8	4.8x1	2698	12053	87
SFV05010-4.8		10	6.35	93	135	16	93	113	98	11	17.5	11	M8	4.8x1	7023	23537	106
SFV05020-2.7		20	9.525	105	152	28	121	128	110	14	20	13	M8	2.7x1	7336	19700	68
SFV06310-4.8	63	10	6.35	108	154	22	105	130	110	14	20	13	M8	4.8x1	7860	30430	126
SFV06320-2.7		20	9.525	122	180	28	120	150	130	18	26	17.5	M8	2.7x1	8162	24741	80
SFV08010-4.8	80	10	6.35	130	176	22	105	152	132	14	20	13	M8	4.8x1	8593	38344	145
SFV08020-4.8		20	9.525	143	204	28	180	172	148	18	26	18	M8	4.8x1	15103	57296	168
SFV08020-7.6		20	9.525	143	204	28	240	172	148	18	26	18	M8	3.8x2	22423	90719	260

بلبرینگ اسکوئی

(اسکو صنعت تاوریژ)

OBC
Oskoyi Ballbearing Company

SFY Series Specifications

کاتالوگ ۲۰۱۷

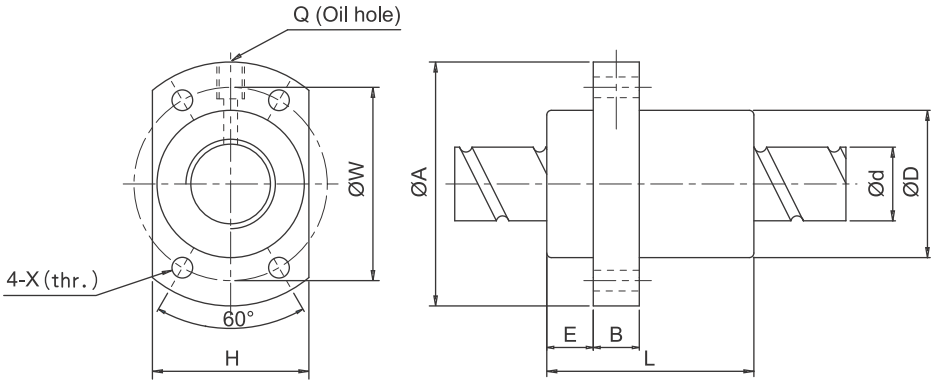

Unit : mm

Large Lead Model No.	d	l	Da	Dimension										Ca (kgf)	Coa (kgf)	K kgf/μm
				D	A	E	B	L	W	H	X	Q	n			
SFY01616-3.6	16	16	2.778	32	53	10.1	10	45	42	34	4.5	M6	1.8x2	1073	2551	31
SFY01616-5.6		16	2.778	32	53	10.1	10	61	42	34	4.5	M6	2.8x2	1568	3968	47
SFY02020-3.6	20	20	3.175	39	62	13	10	52	50	41	5.5	M6	1.8x2	1387	3515	37
SFY02020-5.6		20	3.175	39	62	13	10	72	50	41	5.5	M6	2.8x2	2029	5468	56
SFY02525-3.6	25	25	3.969	47	74	15	12	64	60	49	6.6	M6	1.8x2	2074	5494	45
SFY02525-5.6		25	3.969	47	74	15	12	89	60	49	6.6	M6	2.8x2	3032	8546	69
SFY03232-3.6	32	32	4.762	58	92	17	12	78	74	60	9	M6	1.8x2	3021	8690	58
SFY03232-5.6		32	4.762	58	92	17	12	110	74	60	9	M6	2.8x2	4417	13517	88
SFY04040-3.6	40	40	6.35	73	114	19.5	15	99	93	75	11	M6	1.8x2	4831	14062	70
SFY04040-5.6		40	6.35	73	114	19.5	15	139	93	75	11	M6	2.8x2	7065	21874	106
SFY05050-3.6	50	50	7.938	90	135	21.5	20	117	112	92	14	M6	1.8x2	7220	21974	86
SFY05050-5.6		50	7.938	90	135	21.5	20	167	112	92	14	M6	2.8x2	10558	34182	131
Twin Lead Model No.	**d**	**l**	**Da**	**Dimension**										**Ca (kgf)**	**Coa (kgf)**	**K kgf/μm**
				D	A	E	B	L	W	H	X	Q	n			
SFY01632-1.6	16	32	2.778	32	53	10.1	10	42.5	42	34	4.5	M6	0.8x2	493	1116	11
SFY01632-3.6		32	2.778	32	53	10.1	10	74.5	42	34	4.5	M6	1.8x2	989	2511	23
SFY02040-1.6	20	40	3.175	39	62	13	10	48	50	41	5.5	M6	0.8x2	653	1597	15
SFY02040-3.6		40	3.175	39	62	13	10	88	50	41	5.5	M6	1.8x2	1311	3592	30
SFY02550-1.6	25	50	3.969	47	74	15	12	58	60	49	6.6	M6	0.8x2	976	2495	19
SFY02550-3.6		50	3.969	47	74	15	12	108	60	49	6.6	M6	1.8x2	1960	5614	32
SFY03264-1.6	32	64	4.762	58	92	17	12	71	74	60	9	M6	0.8x2	1374	3571	22
SFY03264-3.6		64	4.762	58	92	17	12	135	74	60	9	M6	1.8x2	2759	8441	46
SFY04080-1.6	40	80	6.35	73	114	19.5	15	90	93	75	11	M6	0.8x2	2273	6387	29
SFY04080-3.6		80	6.35	73	114	19.5	15	170	93	75	11	M6	1.8x2	4566	14370	50
SFY050100-1.6	50	100	7.938	90	135	21.5	20	111	112	92	14	M6	0.8x2	3398	9980	35
SFY050100-3.6		100	7.938	90	135	21.5	20	211	112	92	14	M6	1.8x2	6824	22455	72

تلفن : (021) 33913364 - 33951660

فکس : (021) 33985603

SFY Series Specifications

کاتالوگ ۲۰۱۸

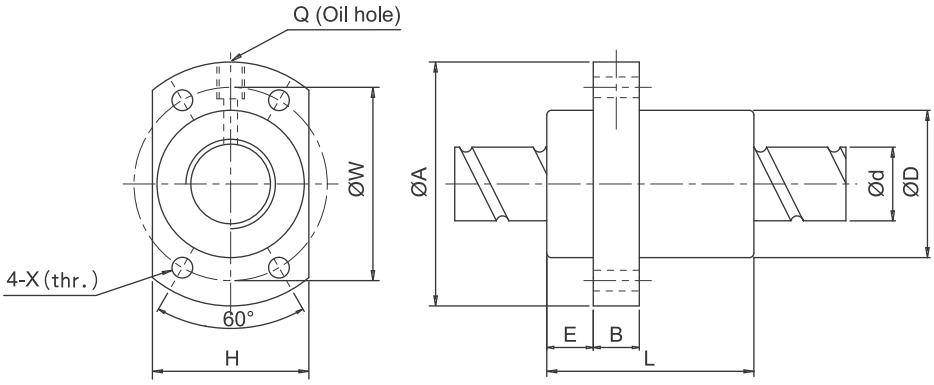

Unit : mm

Large Lead Model No.	d	l	Da	Dimension										Load Rating		K kgf/μm
				D	A	E	B	L	W	H	X	Q	n	Ca (kgf)	Coa (kgf)	
SFY01616-3.6	16	16	2.778	32	53	10.1	10	45	42	34	4.5	M6	1.8x2	1073	2551	31
SFY02020-3.6	20	20	3.175	39	62	13	10	52	50	41	5.5	M6	1.8x2	1387	3515	37
SFY02525-3.6	25	25	3.969	47	74	15	12	64	60	49	6.6	M6	1.8x2	2074	5494	45
SFY03232-3.6	32	32	4.762	58	92	17	12	78	74	60	9	M6	1.8x2	3021	8690	58
SFY04040-3.6	40	40	6.35	73	114	19.5	15	99	93	75	11	M6	1.8x2	4831	14062	70
SFY05050-3.6	50	50	7.938	90	135	21.5	20	117	112	92	14	M6	1.8x2	7220	21974	86
Twin Lead Model No.	**d**	**l**	**Da**	**Dimension**										**Ca (kgf)**	**Coa (kgf)**	**K kgf/μm**
				D	A	E	B	L	W	H	X	Q	n			
SFY01632-1.6	16	32	2.778	32	53	10.1	10	42.5	42	34	4.5	M6	0.8x2	493	1116	11
SFY02040-1.6	20	40	3.175	39	62	13	10	48	50	41	5.5	M6	0.8x2	653	1597	15
SFY02550-1.6	25	50	3.969	47	74	15	12	58	60	49	6.6	M6	0.8x2	976	2495	19
SFY03264-1.6	32	64	4.762	58	92	17	12	71	74	60	9	M6	0.8x2	1374	3571	22
SFY04080-1.6	40	80	6.35	73	114	19.5	15	90	93	75	11	M6	0.8x2	2273	6387	29
SFY050100-1.6	50	100	7.938	90	135	21.5	20	111	112	92	14	M6	0.8x2	3398	9980	35

XSY Series Specifications

کاتالوگ ۲۰۱۸

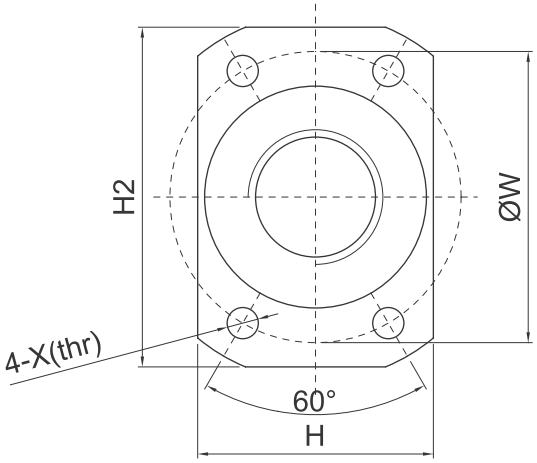

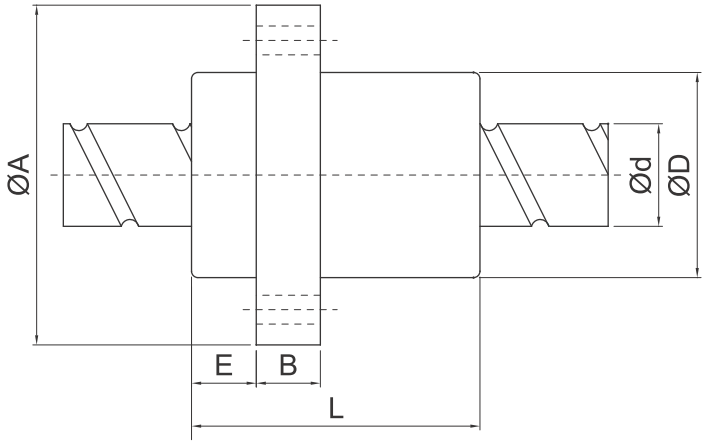

Unit : mm

Model No.	d	l	Da	Dimension										Load Rating		K kgf/μm
				D	A	E	B	L	W	H	H_2	X	n	Ca (kgf)	Coa (kgf)	
XSYR01220A2D-00	12	20	2.5	24	41	3.8	5	50	32	24	36	4.5	1.8x2	777	1718	13

تلفن : (021) 33913364 - 33951660

فکس : (021) 33985603

SCI Series Specifications

کاتالوگ ۲۰۱۷

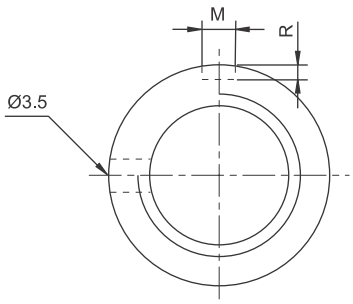

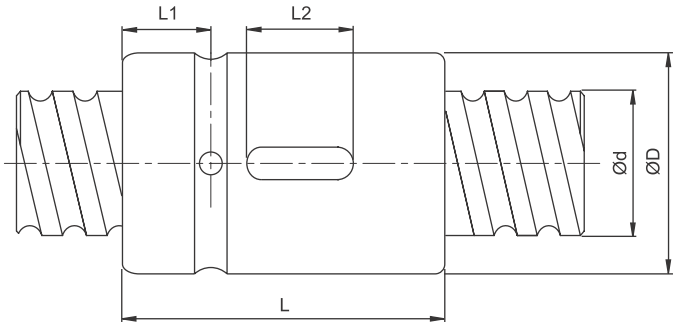

Unit : mm

	Model No.	d	l	Da	Dimension							Ca (kgf)	Coa (kgf)	K kgf/μm
					D	L	L1	L2	M	R	n			
	SCI01604-4	16	4	2.381	30	40	9	15	3	1.5	1x4	973	2406	32
☆	SCI01605-4		5	3.175	30	45	9	20	5	3	1x4	1380	3052	33
	SCI02004-4	20	4	2.381	34	40	9	15	3	1.5	1x4	1066	2987	37
☆	SCI02005-4		5	3.175	34	45	9	20	5	3	1x4	1551	3875	39
	SCI02504-4	25	4	2.381	40	40	9	15	3	1.5	1x4	1180	3795	43
☆	SCI02505-4		5	3.175	40	45	9	20	5	3	1x4	1724	4904	45
	SCI02510-4		10	4.762	46	85	13	30	5	3	1x4	2954	7295	51
	SCI03204-4	32	4	2.381	46	40	9	15	3	1.5	1x4	1296	4838	49
☆	SCI03205-4		5	3.175	46	45	9	20	5	3	1x4	1922	6343	52
☆	SCI03210-4		10	6.35	54	85	13	30	5	3	1x4	4805	12208	62
☆	SCI04005-4	40	5	3.175	56	45	9	20	5	3	1x4	2110	7988	59
☆	SCI04010-4		10	6.35	62	85	13	30	5	3	1x4	5399	15500	72
	SCI05010-4	50	10	6.35	72	85	13	30	5	3	1x4	6004	19614	83
☆	SCI06310-4	63	10	6.35	85	85	13	30	6	3.5	1x4	6719	25358	95
☆	SCI08010-4	80	10	6.35	105	85	13	30	8	4.5	1x4	7346	31953	109

※☆Left helix available

بلبرینگ اسکوئی

(اسکو صنعت تاوریژ)

OBC
Oskoyi Ballbearing Company

SCNI／SCI Series Specifications

کاتالوگ ۲۰۱۸

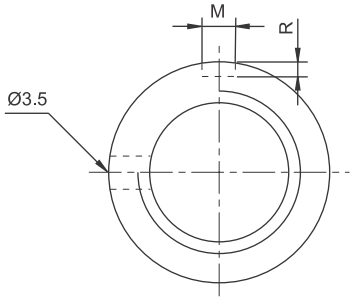

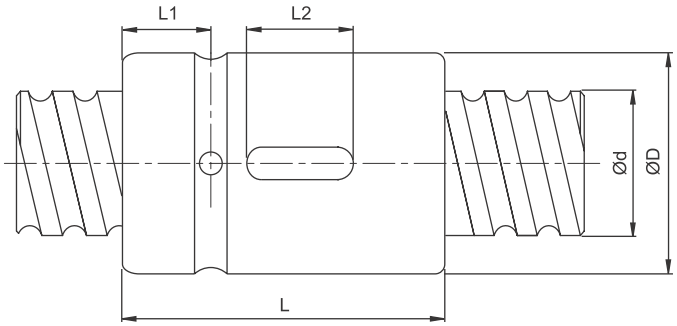

Unit : mm

Model No.	d	l	Da	Dimension							Load Rating		K kgf／μm
				D	L	L1	L2	M	R	n	Ca (kgf)	Coa (kgf)	
SCNI01605-4	16	5	3.175	30	45	9	20	5	3	1x4	1380	3052	33
SCNI02005-4	20	5	3.175	34	45	9	20	5	3	1x4	1551	3875	39
SCNI02505-4	25	5	3.175	40	45	9	20	5	3	1x4	1724	4904	45
SCNI02510-4		10	4.762	46	85	13	30	5	3	1x4	2954	7295	51
SCNI03205-4	32	5	3.175	46	45	9	20	5	3	1x4	1922	6343	52
SCNI03210-4		10	6.35	54	85	13	30	5	3	1x4	4805	12208	62
SCNI04005-4	40	5	3.175	56	45	9	20	5	3	1x4	2110	7988	59
SCNI04010-4		10	6.35	62	85	13	30	5	3	1x4	5399	15500	72
SCNI05010-4	50	10	6.35	72	85	13	30	5	3	1x4	6004	19614	83
SCNI06310-4	63	10	6.35	85	85	13	30	6	3.5	1x4	6719	25358	95
SCNI08010-4	80	10	6.35	105	85	13	30	8	4.5	1x4	7346	31953	109
SCI01604-4	16	4	2.381	30	40	9	15	3	1.5	1x4	973	2406	32
SCI02004-4	20	4	2.381	34	40	9	15	3	1.5	1x4	1066	2987	37
SCI02504-4	25	4	2.381	40	40	9	15	3	1.5	1x4	1180	3795	43
SCI03204-4	32	4	2.381	46	40	9	15	3	1.5	1x4	1296	4838	49

تلفن : (021) 33913364 - 33951660

فکس : (021) 33985603

SFK Series Specifications

کاتالوگ ۲۰۱۷

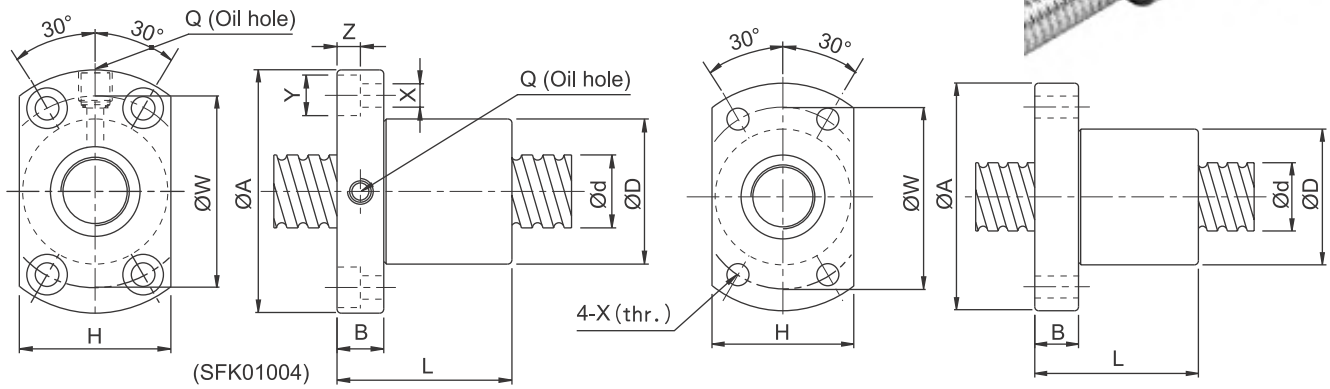

d≧20

(SFK01004)
(SFK02002)
(SFK02502)

Unit: mm

	Model No.	d	l	Da	Dimension											Ca (kgf)	Coa (kgf)	K kgf/μm
					D	A	B	L	W	H	X	Y	Z	Q	n			
	SFK00401	4	1	0.8	10	20	3	12	15	14	2.9	–	–	–	1x2	64	97	5
	SFK00601	6	1	0.8	12	24	3.5	15	18	16	3.4	–	–	–	1x3	111	224	9
☆	SFK00801	8	1	0.8	14	27	4	16	21	18	3.4	–	–	–	1x4	161	403	14
☆	SFK00802		2	1.2	14	27	4	16	21	18	3.4	–	–	–	1x3	222	458	13
	SFK0082.5		2.5	1.2	16	29	4	26	23	20	3.4	–	–	–	1x3	221	457	13
☆	SFK01002	10	2	1.2	18	35	5	28	27	22	4.5	–	–	–	1x3	243	569	15
	SFK01004		4	2	26	46	10	34	36	28	4.5	8	45	M6	1x3	468	905	17
☆	SFK01202	12	2	1.2	20	37	5	28	29	24	4.5	–	–	–	1x4	334	906	22
☆	SFK01402	14	2	1.2	21	40	6	23	31	26	5.5	–	–	–	1x4	354	1053	24
☆	SFK01602	16	2	1.2	25	43	10	40	35	29	5.5	–	–	M6	1x4	373	1200	26

※☆Left helix available

Unit: mm

Model No.	d	l	Da	Dimension											Ca (kgf)	Coa (kgf)	K kgf/μm
				D	A	B	L	W	H	X	Y	Z	Q	n			
XSUR01204T3D-02	12	4	2.5	24	40	6	28	32	25	3.5	–	–	–	1x3	454	722	–
XSUR01205T3D-00		5	2.5	22	37	8	39	29	24	4.5	–	–	–	1x3	675	1316	17

بلبرینگ اسکوئی

(اسکو صنعت تاوریژ)

OBC
Oskoyi Ballbearing Company

SFK Series Specifications

کاتالوگ ۲۰۱۸

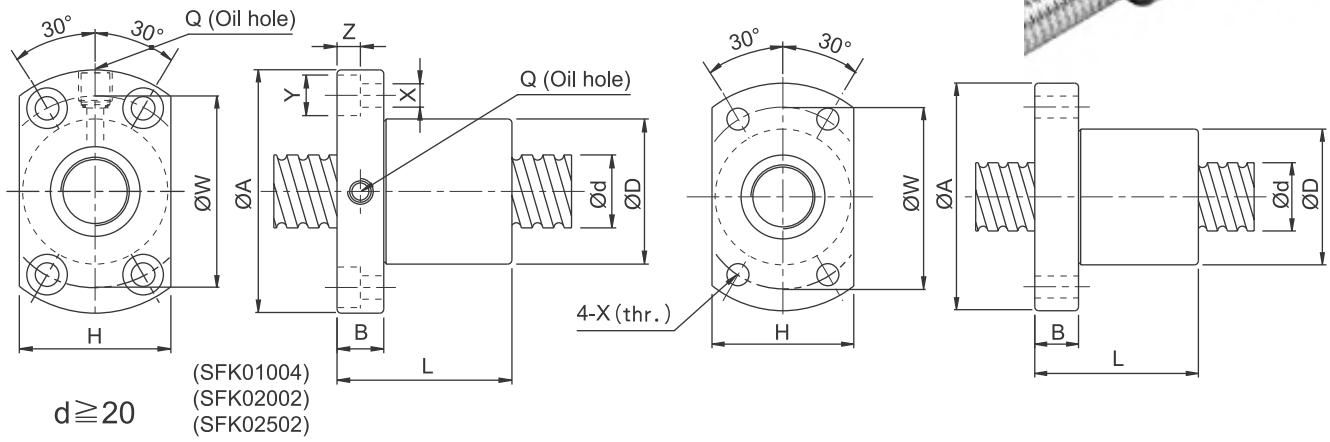

Unit:mm

Model No.	d	l	Da	Dimension											Ca (kgf)	Coa (kgf)	K kgf/μm
				D	A	B	L	W	H	X	Y	Z	Q	n			
SFK00601	6	1	0.8	12	24	3.5	15	18	16	3.4	–	–	–	1x3	111	224	9
SFK00801	8	1	0.8	14	27	4	16	21	18	3.4	–	–	–	1x4	161	403	14
SFK00802		2	1.2	14	27	4	16	21	18	3.4	–	–	–	1x3	222	458	13
SFK0082.5		2.5	1.2	16	29	4	26	23	20	3.4	–	–	–	1x3	221	457	13
SFK01002	10	2	1.2	18	35	5	28	27	22	4.5	–	–	–	1x3	243	569	15
SFK01004		4	2	26	46	10	34	36	28	4.5	8	4.5	M6	1x3	468	905	17
SFK01202	12	2	1.2	20	37	5	28	29	24	4.5	–	–	–	1x4	334	906	22
SFK01402	14	2	1.2	21	40	6	23	31	26	5.5	–	–	–	1x4	354	1053	24

Unit:mm

Model No.	d	l	Da	Dimension											Ca (kgf)	Coa (kgf)	K kgf/μm
				D	A	B	L	W	H	X	Y	Z	Q	n			
XSUR01204T3D-02	12	4	2.5	24	40	6	28	32	25	3.5	–	–	–	1x3	454	722	–
XSUR01205T3D-00		5		22	37	8	39	29	24	4.5	–	–	–	1x3	675	1316	17

تلفن : (021) 33913364 - 33951660

فکس : (021) 33985603

BSH Series Specifications

کاتالوگ ۲۰۱۷

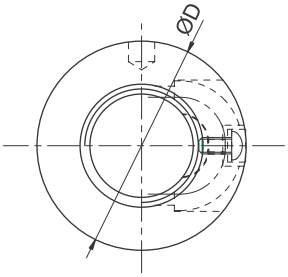

d≦12
(External circulation type)

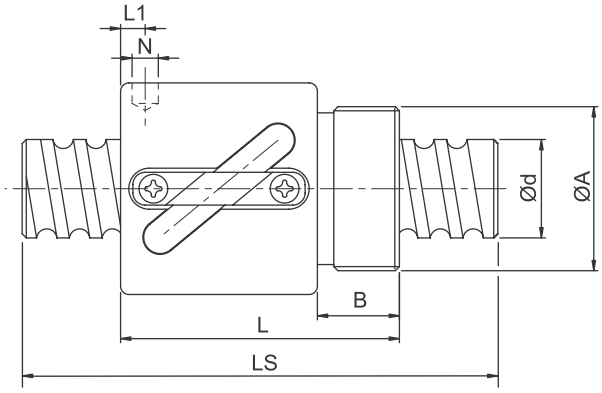

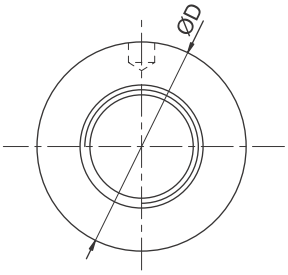

d≧14
(Iternal circulation type)

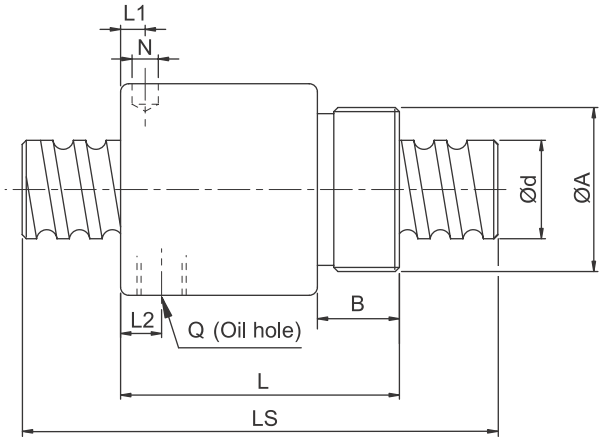

Unit : mm

Model No.	Dimensions														
	d	l	Da	D	A	B	L	L1	N	L2	Q	n	Ca	Coa	K
BSHR0082.5-2.5	8	2.5	1.2	17.5	M15x1P	7.5	23.5	10	3	-	-	2.5x1	189	381	11
BSHR01002-3.5	10	2	1.2	19.5	M17x1P	7.5	22	3	3.2	-	-	3.5x1	277	664	17
BSHR01004-2.5		4	2	25	M20x1P	10	34	3	3	-	-	2.5x1	400	754	14
BSHR01204-3.5	12	4	2.5	25.5	M20x1P	10	34	13	3	-	-	3.5x1	804	1649	23
BSHR01205-3.5		5	2.5	25.5	M20x1P	10	39	16.25	3	-	-	3.5x1	801	1644	24
BSHR01404-3.5	14	4	2.381	32.1	M25x1.5P	10	35	13	3	-	-	3.5x1	804	1803	26
BSHR01604-3	16	4	2.381	29	M22x1.5P	8	32	4	3.2	-	-	1x3	759	1804	24
BSHR01605-3		5	3.175	32.5	M26x1.5P	12	42	19.25	3	-	-	1x3	1077	2289	25
BSHR02005-3	20	5	3.175	38	M35x1.5P	15	45	20.3	3	-	-	1x3	1211	2906	30
BSHR02505-4	25	5	3.175	43	M40x1.5P	19	69	32.11	3	8	M6	1x4	1724	4904	37

Note : Nuts do not attach seals from ∅ 8 to ∅16.

BSH Series Specifications

کاتالوگ ۲۰۱۸

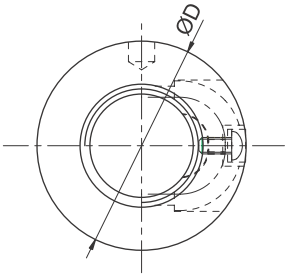

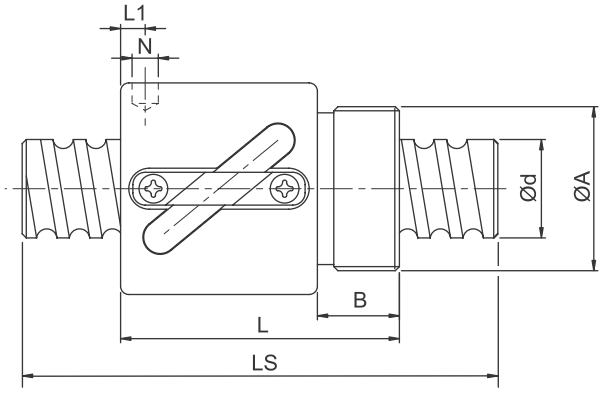

d≦12
(External circulation type)

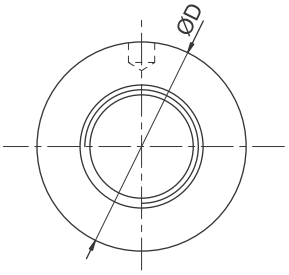

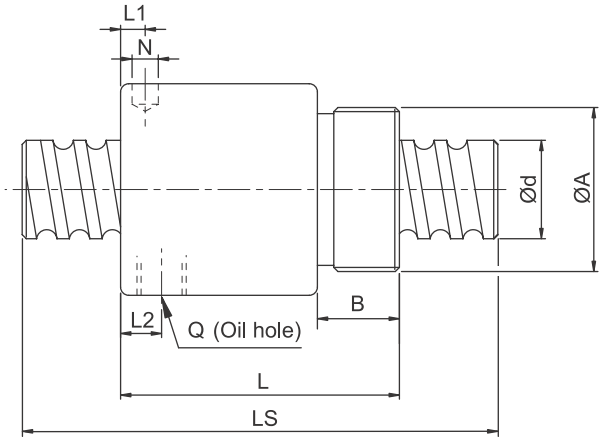

d≧14
(Iternal circulation type)

Unit : mm

Model No.	d	l	Da	Dimension									Ca (kgf)	Coa (kgf)	K kgf/μm
				D	A	B	L	L1	N	L2	Q	n			
BSHR0082.5-2.5	8	2.5	1.2	17.5	M15x1P	7.5	23.5	10	3	–	–	2.5x1	189	381	11
BSHR01002-3.5	10	2	1.2	19.5	M17x1P	7.5	22	3	3.2	–	–	3.5x1	277	664	17
BSHR01004-2.5		4	2	25	M20x1P	10	34	3	3	–	–	2.5x1	400	754	14
BSHR01204-3.5	12	4	2.5	25.5	M20x1P	10	34	13	3	–	–	3.5x1	804	1649	23
BSHR01205-3.5		5	2.5	25.5	M20x1P	10	39	16.25	3	–	–	3.5x1	801	1644	24
BSHR01404-3	14	4	2.5	32.1	M25x1.5P	10	35	11	3	–	–	1x3	748	1609	26
BSHR01604-3	16	4	2.381	29	M22x1.5P	8	32	4	3.2	–	–	1x3	759	1804	24
BSHR01605-3		5	3.175	32.5	M26x1.5P	12	42	19.25	3	–	–	1x3	1077	2289	25
BSHR01610-2		10	3.175	32	M26x1.5P	12	50	3	4	3	M4	1x2	675	1316	14
BSHR02005-3	20	5	3.175	38	M35x1.5P	15	45	20.3	3	–	–	1x3	1211	2906	30
BSHR02505-4	25	5	3.175	43	M40x1.5P	19	69	32.11	3	8	M6	1x4	1724	4904	37
BSHR02510-4		10	4.762	43	M40x1.5P	19	84	8	6	8	M6	1x4	2954	7295	41

※Standard ballnut from Ø8~Ø16 is assembled without wiper.

تلفن : (021) 33913364 - 33951660

فکس : (021) 33985603

SFS (DIN 69051 FORM B) Series Specifications

کاتالوگ ۲۰۱۷

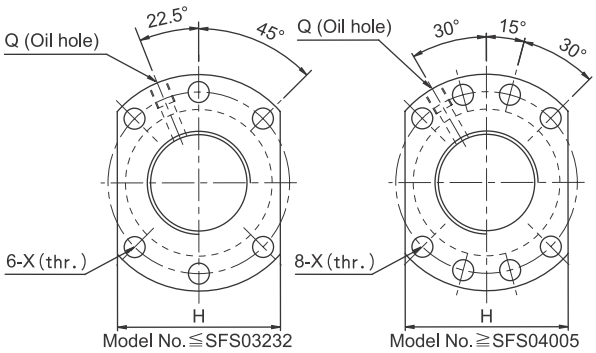

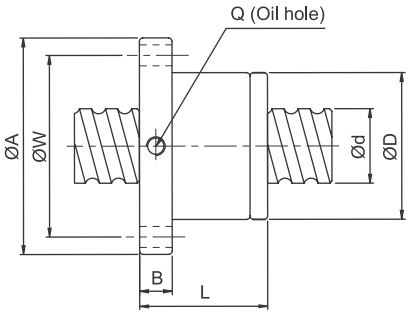

Unit: mm

Model No.	Dimensions														
	d	l	Da	D	A	B	L	W	H	X	Q	n	Ca	Coa	K
SFS01205-2.8	12	5	2.5	24	40	10	31	32	30	4.5		2.8x1	661	1316	19
SFS01210-2.8		10	2.5	24	40	10	48.5	32	30	4.5		2.8x1	642	1287	19
SFS01605-3.8	15	5	2.778	28	48	10	38	38	40	5.5	M6	3.8x1	1112	2507	30
SFS01610-2.8		10	2.778	28	48	10	47	38	40	5.5	M6	2.8x1	839	1821	23
SFS01616-1.8		16	2.778	28	48	10	45	38	40	5.5	M6	1.8x1	552	1137	14
SFS01616-2.8		16	2.778	28	48	10	61	38	40	5.5	M6	2.8x1	808	1769	22
SFS01620-1.8		20	2.778	28	48	10	57	38	40	5.5	M6	1.8x1	554	1170	14
SFS02005-3.8	20	5	3.175	36	58	10	40	47	44	6.6	M6	3.8x1	1484	3681	37
SFS02006-4.8		6	3.175	36	58	10	50	47	44	6.6	M6	4.8x1	1811	4644	47
SFS02008-4.8		8	3.175	36	58	10	60	47	44	6.6	M6	4.8x1	1863	4861	50
SFS02010-3.8		10	3.175	36	58	10	60	47	44	6.6	M6	3.8x1	1516	3833	40
SFS02020-1.8		20	3.175	36	58	10	57	47	44	6.6	M6	1.8x1	764	1758	19
SFS02020-2.8		20	3.175	36	58	10	77	47	44	6.6	M6	2.8x1	1118	2734	29
SFS02505-3.8	25	5	3.175	40	62	10	40	51	48	6.6	M6	3.8x1	1650	4658	43
SFS02506-4.8		6	3.175	40	62	10	50	51	48	6.6	M6	4.8x1	2015	5879	55
SFS02508-4.8		8	3.175	40	62	10	60	51	48	6.6	M6	4.8x1	2009	5867	56
SFS02510-3.8		10	3.175	40	62	12	62	51	48	6.6	M6	3.8x1	1638	4633	45
SFS02525-1.8		25	3.175	40	62	12	70	51	48	6.6	M6	1.8x1	843	2199	22
SFS02525-2.8		25	3.175	40	62	12	95	51	48	6.6	M6	2.8x1	1232	3421	34
SFS03205-3.8	32	5	3.175	50	80	12	42	65	62	9	M6	3.8x1	1839	6026	51
SFS03206-4.8		6	3.175	50	80	12	51	65	62	9	M6	4.8x1	2247	7608	65
SFS03208-4.8	31	8	3.969	50	80	12	62	65	62	9	M6	4.8x1	3015	9181	68
SFS03210-3.8		10	3.969	50	80	13	62	65	62	9	M6	3.8x1	2460	7255	55
SFS03220-2.8		20	3.969	50	80	12	80	65	62	9	M6	2.8x1	1907	5482	43
SFS03232-1.8		32	3.969	50	80	13	84	65	62	9	M6	1.8x1	1257	3426	27
SFS03232-2.8		32	3.969	50	80	13	116	65	62	9	M6	2.8x1	1838	5329	42
SFS04005-3.8	40	5	3.175	63	93	15	45	78	70	9	M8	3.8x1	2018	7589	60
SFS04006-4.8		6	3.175	63	93	14	50	78	70	9	M6	4.8x1	2467	9583	77
SFS04008-4.8	38	8	3.969	63	93	14	61	78	70	9	M6	4.8x1	3327	11491	81
SFS04010-3.8		10	6.35	63	93	14	63	78	70	9	M8	3.8x1	5035	13943	67
SFS04020-2.8		20	6.35	63	93	14	82	78	70	9	M8	2.8x1	3959	10715	54
SFS04040-1.8		40	6.35	63	93	15	105	78	70	9	M8	1.8x1	2585	6648	34
SFS04040-2.8		40	6.35	63	93	15	145	78	70	9	M8	2.8x1	3780	10341	52
SFS05005-3.8	50	5	3.175	75	110	15	45	93	85	11	M8	3.8x1	2207	9542	68
SFS05010-3.8	48	10	6.35	75	110	18	68	93	85	11	M8	3.8x1	5638	17852	79
SFS05012-3.8		12	6.35	75	110	18	75	93	85	11	M8	3.8x1	5632	17836	81
SFS05020-3.8		20	6.35	75	110	18	108	93	85	11	M8	3.8x1	5749	18485	87
SFS05050-1.8		50	6.35	75	110	18	125	93	85	11	M8	1.8x1	2946	8749	42
SFS05050-2.8		50	6.35	75	110	18	175	93	85	11	M8	2.8x1	4308	13610	65
SFS06310-3.8	61	10	6.35	90	125	18	70	108	95	11	M8	3.8x1	6343	23308	94
SFS06316-3.8		16	6.35	90	125	18	95	108	95	11	M8	3.8x1	6327	23262	100
SFS06320-3.8		20	7.144	95	135	20	116	115	100	13.5	M8	3.8x1	7493	26424	105
SFS08010-3.8	77	10	6.35	105	145	20	70	125	110	13.5	M8	3.8x1	6980	29563	105
SFS08020-3.8		20	9.525	125	165	25	120	145	130	13.5	M8	3.8x1	12145	43598	128
SFS10020-3.8	96	20	12.7	150	202	30	124	176	155	17.5	M8	3.8x1	19633	71408	152

Note: with sign ★ can be produced in left helix

بلبرینگ اسکوئی

(اسکو صنعت تاوریژ)

OBC
Oskoyi Ballbearing Company

DFV Series Specifications

کاتالوگ ۲۰۱۷

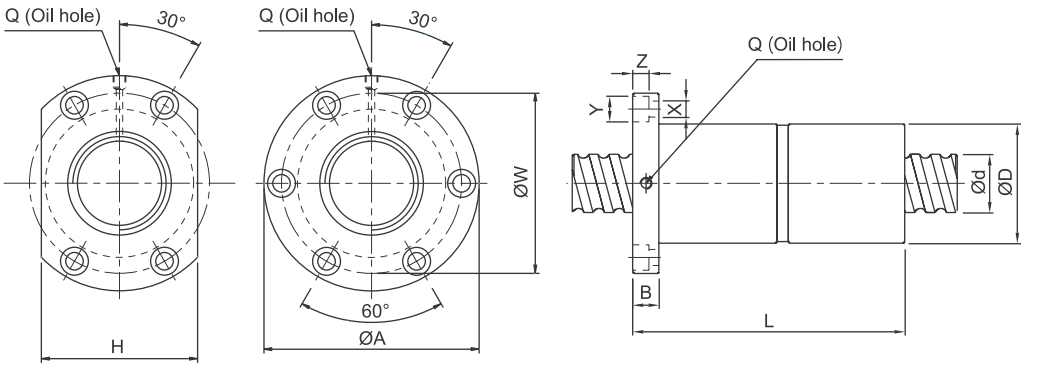

Unit : mm

Model No.	Dimensions																
	d	l	Da	D	A	B	L	W	H	X	Y	Z	Q	n	Ca	Coa	K
DFV01510-2.7	15	10	3.175	34	58	10	107	45	34	5.5	9.5	5.5	M6	2.7x1	972	2020	30
DFV01604-3.8	16	4	2.381	34	57	11	89	45	34	5.5	9.5	5.5	M6	3.8x1	931	2285	42
DFV01605-4.8		5	3.175	40	63	11	113	51	42	5.5	9.5	5.5	M6	4.8x1	1614	3662	53
DFV01610-2.7		10	3.175	40	63	11	106	51	42	5.5	9.5	5.5	M6	2.7x1	1008	2161	32
DFV02004-4.8	20	4	2.381	40	60	10	94	50	40	4.5	8	4	M6	4.8x1	1247	3584	61
DFV02005-4.8		5	3.175	44	67	11	112	55	52	5.5	9.5	5.5	M6	4.8x1	1814	4650	63
DFV02010-2.7		10	3.969	46	74	13	117	59	46	6.6	11	6.5	M6	2.7x1	1518	3398	40
DFV02505-4.8	25	5	3.175	50	73	11	105	61	52	5.5	9.5	5.5	M8	4.8x1	2017	5884	75
DFV02506-4.8		6	3.969	53	76	11	116	64	58	5.5	9.5	5.5	M6	4.8x1	2711	7268	78
DFV02508-4.8		8	4.762	56	85	13	134	71	64	6.5	11	6.5	M6	4.8x1	3466	8776	82
DFV02510-2.7		10	6.35	68	102	15	130	84	82	9	14	8.5	M8	2.7x1	3040	6547	49
DFV03204-4.8	32	4	2.381	54	81	12	94	67	64	6.6	11	6.5	M6	4.8x1	1517	5806	85
DFV03205-4.8		5	3.175	58	85	12	106	71	64	6.6	11	6.5	M8	4.8x1	2249	7612	90
DFV03206-4.8		6	3.969	62	89	12	114	75	68	6.6	11	6.5	M8	4.8x1	3079	9575	95
DFV03208-4.8		8	4.762	66	100	15	139	82	76	9	14	8.5	M8	4.8x1	3962	11547	100
DFV03210-4.8		10	6.35	74	108	15	186	90	82	9	14	9	M8	4.8x1	5620	14649	101
DFV03220-2.7		20	6.35	74	108	16	200	90	82	9	14	8.5	M8	2.7x1	3509	8644	61
DFV04005-4.8	40	5	3.175	67	101	15	109	83	72	9	14	8.5	M8	4.8x1	2468	9586	105
DFV04010-4.8		10	6.35	82	124	18	188	102	94	11	17.5	11	M8	4.8x1	6316	18600	121
DFV04020-2.7		20	6.35	82	124	18	200	102	90	11	17.5	11	M8	2.7x1	3935	10893	74
DFV05005-4.8	50	5	3.175	80	114	15	115	96	82	9	14	8.5	M8	4.8x1	2698	12053	122
DFV05010-4.8		10	6.35	93	135	16	173	113	98	11	17.5	11	M8	4.8x1	7023	23537	144
DFV05020-2.7		20	9.525	105	152	28	221	128	110	14	20	13	M8	2.7x1	7336	19700	90
DFV06310-4.8	63	10	6.35	108	154	22	195	130	110	14	20	13	M8	4.8x1	7860	30430	172
DFV06320-2.7		20	9.525	122	180	28	220	150	130	18	26	17.5	M8	2.7x1	8162	24741	107
DFV08010-4.8	80	10	6.35	130	176	22	195	152	132	14	20	13	M8	4.8x1	8593	38344	201
DFV08020-4.8		20	9.525	143	204	28	340	172	148	18	26	18	M8	4.8x1	15103	57296	226
DFV08020-7.6		20	9.525	143	204	28	460	172	148	18	26	18	M8	3.8x2	22423	90719	351

Note: with sign ★ can be produced in left helix

تلفن : (021) 33913364 - 33951660

فکس : (021) 33985603

DFS (DIN 69051 FORM B) Series Specifications

کاتالوگ ۲۰۱۷

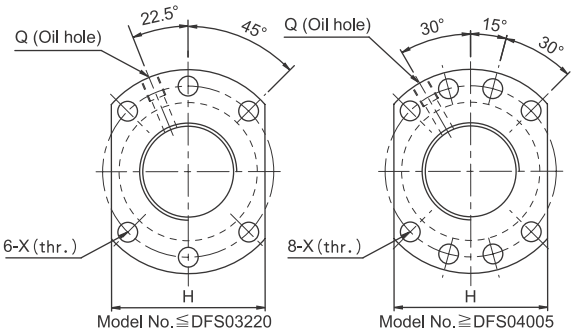

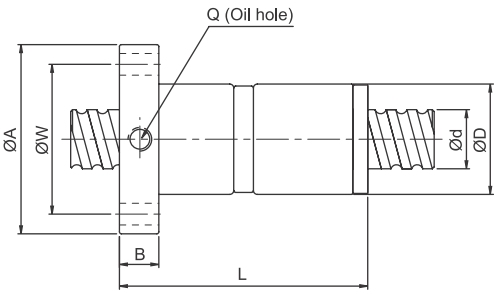

Unit : mm

Model No.	Dimensions														
	d	l	Da	D	A	B	L	W	H	X	Q	n	Ca	Coa	K
DFS01605-3.8	15	5	2.778	28	48	10	73	38	40	5.5	M6	3.8x1	1112	2507	41
DFS01610-2.8		10	2.778	28	48	10	97	38	40	5.5	M6	2.8x1	839	1821	31
DFS02005-3.8	20	5	3.175	36	58	10	75	47	44	6.6	M6	3.8x1	1484	3681	50
DFS02006-4.8		6	3.175	36	58	10	98	47	44	6.6	M6	4.8x1	1811	4644	63
DFS02008-4.8		8	3.175	36	58	10	116	47	44	6.6	M6	4.8x1	1863	4861	66
DFS02010-3.8		10	3.175	36	58	10	120	47	44	6.6	M6	3.8x1	1516	3833	53
DFS02505-3.8	25	5	3.175	40	62	10	75	51	48	6.6	M6	3.8x1	1650	4658	59
DFS02506-4.8		6	3.175	40	62	10	98	51	48	6.6	M6	4.8x1	2015	5879	75
DFS02508-4.8		8	3.175	40	62	10	116	51	48	6.6	M6	4.8x1	2009	5867	76
DFS02510-3.8		10	3.175	40	62	12	122	51	48	6.6	M6	3.8x1	1638	4633	61
DFS03205-3.8	32	5	3.175	50	80	12	82	65	62	9	M6	3.8x1	1839	6026	71
DFS03206-4.8		6	3.175	50	80	12	99	65	62	9	M6	4.8x1	2247	7608	90
DFS03208-4.8	31	8	3.969	50	80	12	126	65	62	9	M6	4.8x1	3015	9181	92
DFS03210-3.8		10	3.969	50	80	13	122	65	62	9	M6	3.8x1	2460	7255	75
DFS03220-2.8		20	3.969	50	80	12	160	65	62	9	M6	2.8x1	1907	5482	58
DFS04005-3.8	40	5	3.175	63	93	15	85	78	70	9	M8	3.8x1	2018	7589	83
DFS04006-4.8		6	3.175	63	93	14	98	78	70	9	M6	4.8x1	2467	9583	106
DFS04008-4.8	38	8	3.969	63	93	14	125	78	70	9	M6	4.8x1	3327	11491	110
DFS04010-3.8		10	6.35	63	93	14	123	78	70	9	M8	3.8x1	5035	13943	91
DFS04020-2.8		20	6.35	63	93	14	162	78	70	9	M8	2.8x1	3959	10715	73
DFS05005-3.8	50	5	3.175	75	110	15	85	93	85	11	M8	3.8x1	2207	9542	96
DFS05010-3.8	48	10	6.35	75	110	18	138	93	85	11	M8	3.8x1	5638	17852	109
DFS05012-3.8		12	6.35	75	110	18	147	93	85	11	M8	3.8x1	5632	17836	110
DFS05020-3.8		20	6.35	75	110	18	218	93	85	11	M8	3.8x1	5749	18485	116
DFS06310-3.8	61	10	6.35	90	125	18	140	108	95	11	M8	3.8x1	6343	23308	130
DFS06316-3.8		16	6.35	90	125	18	191	108	95	13.5	M8	3.8x1	6327	23262	136
DFS06320-3.8		20	7.144	95	135	20	226	115	100	13.5	M8	3.8x1	7493	26424	142
DFS08010-3.8	77	10	6.35	105	145	20	140	125	110	13.5	M8	3.8x1	6980	29563	149
DFS08020-3.8		20	9.525	125	165	25	230	145	130	13.5	M8	3.8x1	12145	43598	174
DFS10020-3.8	96	20	12.7	150	202	30	244	176	155	17.5	M8	3.8x1	19633	71408	208

Note: with sign ★ can be produced in left helix

بلبرینگ اسکوئی

(اسکو صنعت تاوریژ)

OBC
Oskoyi Ballbearing Company

DFI Series Specifications

کاتالوگ ۲۰۱۷

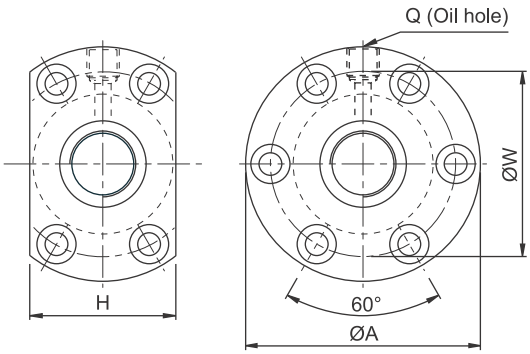

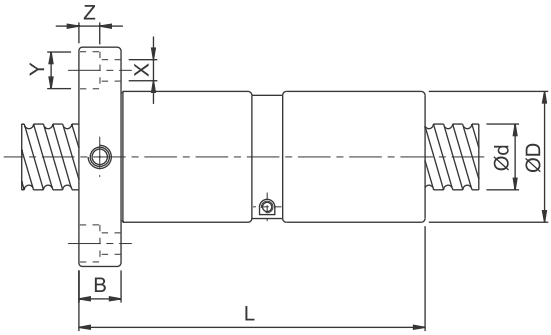

Unit : mm

	Model No.	Dimensions																
		d	l	Da	D	A	B	L	W	H	X	Y	Z	Q	n	Ca	Coa	K
	DFI01604-4	16	4	2.381	30	49	10	80	39	34	4.5	8	4.5	M6	1x4	973	2406	44
	DFI01605-4		5	3.175	30	49	10	100	39	34	4.5	8	4.5	M6	1x4	1380	3052	44
	DFI02004-4	20	4	2.381	34	57	11	80	45	40	5.5	9.5	5.5	M6	1x4	1066	2987	51
★	DFI02005-4		5	3.175	34	57	11	101	45	40	5.5	9.5	5.5	M6	1x4	1551	3875	52
	DFI02504-4	25	4	2.381	40	63	11	80	51	46	5.5	9.5	5.5	M6	1x4	1180	3795	60
★	DFI02505-4		5	3.175	40	63	11	101	51	46	5.5	9.5	5.5	M8	1x4	1724	4904	62
	DFI02510-4		10	4.762	46	72	12	145	58	52	6.5	11	6.5	M6	1x4	2954	7295	68
	DFI03204-4	32	4	2.381	46	72	12	80	58	52	6.5	11	6.5	M6	1x4	1296	4838	69
★	DFI03205-4		5	3.175	46	72	12	102	58	52	6.5	11	6.5	M8	1x4	1922	6343	72
	DFI03210-4		10	6.35	54	88	15	162	70	62	9	14	8.5	M8	1x4	4805	12208	83
★	DFI04005-4	40	5	3.175	56	90	15	105	72	64	9	14	8.5	M8	1x4	2110	7988	84
	DFI04010-4		10	6.35	62	104	18	165	82	70	11	17.5	11	M8	1x4	5399	15500	99
	DFI05010-4	50	10	6.35	72	114	18	171	92	82	11	17.5	11	M8	1x4	6004	19614	115
★	DFI06310-4	63	10	6.35	85	131	22	182	107	95	14	20	13	M8	1x4	6719	25358	135
★	DFI08010-4	80	10	6.35	105	150	22	182	127	115	14	20	13	M8	1x4	7346	31953	156

Note: with sign ★ can be produced in left helix

تلفن : (021) 33913364 - 33951660

فکس : (021) 33985603

DFU (DIN 69051 FORM B) Series Specifications

کاتالوگ ۲۰۱۷

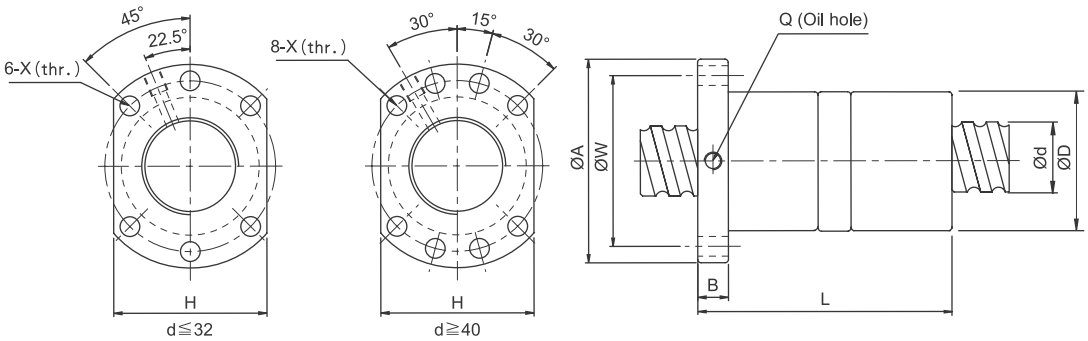

Unit : mm

	Model No.	Dimensions														
		d	l	Da	D	A	B	L	W	X	H	Q	n	Ca	Coa	K
	DFU01604-4	16	4	2.381	28	48	10	80	38	5.5	40	M6	1x4	973	2406	43
★	DFU01605-4		5	3.175	28	48	10	100	38	5.5	40	M6	1x4	1380	3052	44
★	DFU01610-3		10	3.175	28	48	10	118	38	5.5	40	M6	1x3	1103	2401	35
	DFU02004-4	20	4	2.381	36	58	10	80	47	6.6	44	M6	1x4	1066	2987	51
★	DFU02005-4		5	3.175	36	58	10	101	47	6.6	44	M6	1x4	1551	3875	53
	DFU02504-4	25	4	2.381	40	62	10	80	51	6.6	48	M6	1x4	1180	3795	60
★	DFU02505-4		5	3.175	40	62	10	101	51	6.6	48	M6	1x4	1724	4904	62
	DFU02506-4		6	3.969	40	62	10	105	51	6.6	48	M6	1x4	2318	6057	64
	DFU02508-4		8	4.762	40	62	10	120	51	6.6	48	M6	1x4	2963	7313	67
★	DFU02510-4		10	4.762	40	62	12	145	51	6.6	48	M6	1x4	2954	7295	67
	DFU03204-4	32	4	2.381	50	80	12	80	65	9	62	M6	1x4	1296	4838	71
★	DFU03205-4		5	3.175	50	80	12	102	65	9	62	M6	1x4	1922	6343	74
	DFU03206-4		6	3.969	50	80	12	105	65	9	62	M6	1x4	2632	7979	78
	DFU03208-4		8	4.762	50	80	12	122	65	9	62	M6	1x4	3387	9622	82
★	DFU03210-4		10	6.35	50	80	12	162	65	9	62	M6	1x4	4805	12208	82
★	DFU04005-4	40	5	3.175	63	93	14	105	78	9	70	M8	1x4	2110	7988	87
	DFU04006-4		6	3.969	63	93	14	108	78	9	70	M6	1x4	2873	9913	91
	DFU04008-4		8	4.762	63	93	14	132	78	9	70	M6	1x4	3712	11947	96
★	DFU04010-4		10	6.35	63	93	14	165	78	9	70	M8	1x4	5399	15500	99
★	DFU05010-4	50	10	6.35	75	110	16	171	93	11	85	M8	1x4	6004	19614	117
★	DFU05020-4		20	7.144	75	110	16	280	93	11	85	M8	1x4	7142	22588	126
★	DFU06310-4	63	10	6.35	90	125	18	182	108	11	95	M8	1x4	6719	25358	139
	DFU06320-4		20	9.525	95	135	20	290	115	13.5	100	M8	1x4	11444	36653	152
★	DFU08010-4	80	10	6.35	105	145	20	182	125	13.5	110	M8	1x4	7346	31953	156
	DFU08020-4		20	9.525	125	165	25	295	145	13.5	130	M8	1x4	12911	47747	187
	DFU10020-4	100	20	9.525	150	202	30	340	170	17.5	155	M8	1x4	14303	60698	222

Note: with sign ★ can be produced in left helix

DFM Series Specifications
(Design for Milling)

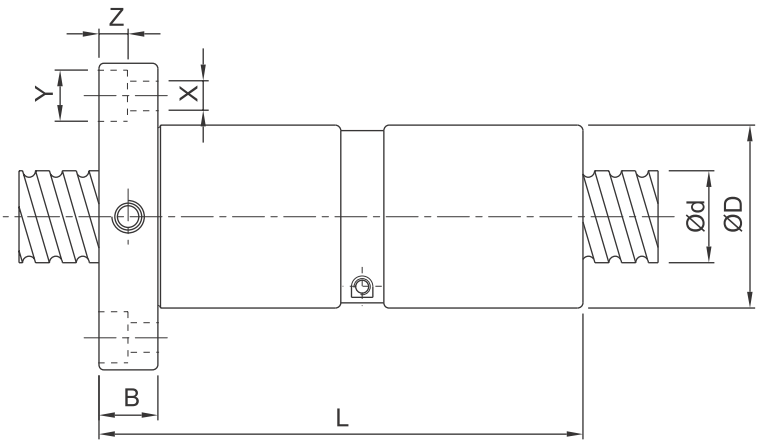

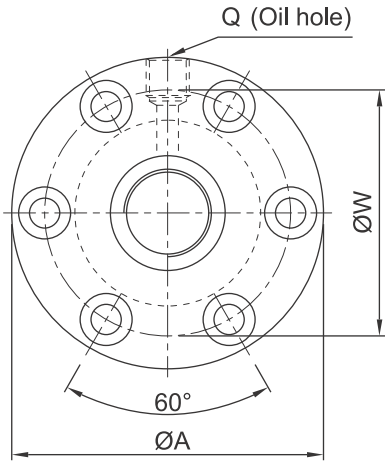

Unit : mm

	Model No.	d	l	Da	Dimension											Ca (kgf)	Coa (kgf)	K kgf／μm
					D	A	B	L	W	H	X	Y	Z	Q	n			
☆	DFM03205-4	32	5	3.175	48	74	12	102	60	60	6.5	11	6.5	M8	1x4	1922	6343	73
☆	DFM0325T-4		5.08	3.175	48	74	12	104	60	60	6.5	11	6.5	M8	1x4	1922	6343	73

Note : For double ball screw nut order, please contact ***TBIMOTION*** in advance.
※☆Left helix available

تلفن : (021) 33913364 - 33951660
فکس : (021) 33985603

(TYPE) : SFE

کاتالوگ ۲۰۱۷

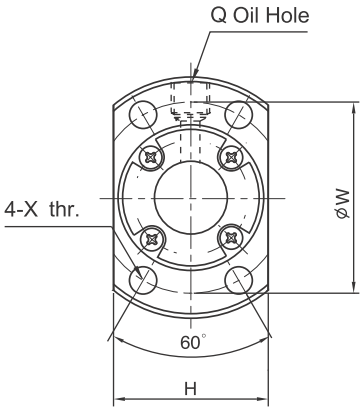

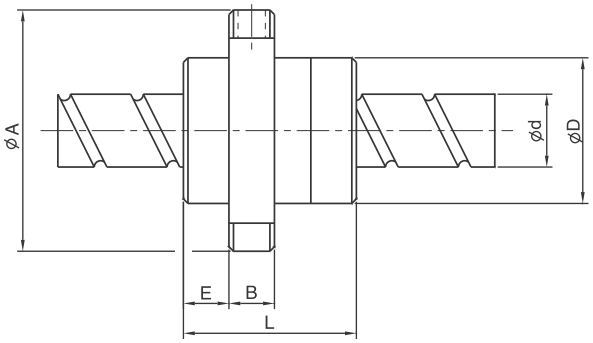

Unit : mm

Model No.	Dimensions															
	d	l	Da	D	A	E	B	L	X	W	H	Q	n	Ca	Coa	K
SFE01616-3	16	16	2.778	32	53	10.1	10	38	4.5	42	34	M6	1.7x2	1021	2409	29
SFE01616-6		16	2.778	32	53	10.1	10	38	4.5	42	34	M6	1.7x4	1853	4818	57
SFE01632-3	16	32	2.778	34	55	10.5	10	34	5.5	45	36	M6	0.7x2	439	976	11
SFE01632-6		32	2.778	34	55	10.5	10	34	5.5	45	36	M6	0.7x4	797	1953	21
SFE02020-3	20	20	3.175	39	62	12	10	47	5.5	50	41	M6	1.7x2	1321	3320	35
SFE02020-6		20	3.175	39	62	12	10	47	5.5	50	41	M6	1.7x4	2397	6640	67
SFE02040-3	20	40	3.175	38	58	11	10	41	5.5	48	40	M6	0.7x2	582	1397	13
SFE02040-6		40	3.175	38	58	11	10	41	5.5	48	40	M6	0.7x4	1056	2794	26
SFE02525-3	25	25	3.969	47	74	14	12	57	6.6	60	49	M6	1.7x2	1974	5188	43
SFE02525-6		25	3.969	47	74	14	12	57	6.6	60	49	M6	1.7x4	3583	10377	83
SFE02550-3	25	50	3.969	46	70	13	12	50	6.6	58	48	M6	0.7x2	870	2183	16
SFE02550-6		50	3.969	46	70	13	12	50	6.6	58	48	M6	0.7x4	1579	4366	32
SFE03232-3	32	32	4.762	58	92	17	12	71	9	74	60	M6	1.7x2	2876	8207	54
SFE03232-6		32	4.762	58	92	17	12	71	9	74	60	M6	1.7x4	5220	16414	106
SFE03264-3	32	64	4.762	58	92	15.5	12	62	9	74	60	M6	0.7x2	1225	3282	20
SFE03264-6		64	4.762	58	92	15.5	12	62	9	74	60	M6	0.7x4	2223	6565	39
SFE04040-3	40	40	6.35	73	114	19.5	15	89	11	93	75	M6	1.7x2	4600	13281	66
SFE04040-6		40	6.35	73	114	19.5	15	89	11	93	75	M6	1.7x4	8348	26561	128
SFE05050-3	50	50	7.938	90	135	21.5	20	107	14	112	92	M6	1.7x2	6512	19430	80
SFE05050-6		50	7.938	90	135	21.5	20	107	14	112	92	M6	1.7x4	11820	38859	155

Note: 1. "-3" means 2 starts, "-6" means 4 starts.
Note: 2. *TBI MOTION* Standard nuts are without seals, if required, please advise.